# Polo 1995 ➤

## 5-speed manual gearbox 085

| Gearbox ID | CJC | CKE | CLJ | CWN | CWS | CWT | CWU | CWV | CZG |
|---|---|---|---|---|---|---|---|---|---|
| | DCT | DDH | DDJ | CWL | CWX | DCA | DCC | DCD | DCH |
| | DCG | DCJ | DHB | DED | DKC | DKE | DKF | DKG | DPX |
| | DQW | DSP | DSQ | DTX | DWZ | DXD | DXE | DXF | DXG |
| | DXH | DXJ | DXK | DXM | DXP | DXQ | DUY | ERD | EQW |
| | EQX | EQY | EQZ | ESY | ESZ | ETA | ETB | ETC | ETD |
| | ETE | ETF | ETG | FDQ | FDY | FFD | FFE | FFF | FFL |
| | FFM | FFR | FFS | FFV | FFW | FHX | FHZ | | |

Edition 01.1996

Protected by copyright. Copying for private or commercial purposes, in part or in whole, is not permitted unless authorised by Volkswagen AG. Volkswagen AG does not guarantee or accept any liability with respect to the correctness of information in this document. Copyright by Volkswagen AG.

satelettronica

# List of Workshop Manual Repair GroupsList of Workshop Manual Repair GroupsList of Workshop Manual Repair Groups

## Polo 1995 ➤

## 5-speed manual gearbox 085

### Repair Group

00 - Technical data
30 - Clutch
34 - Controls, Housing
35 - Gears, Shafts
39 - Final drive, Differential rear

satelettronica

Protected by copyright. Copyright by Volkswagen AG. Volkswagen AG does not guarantee or accept any liability with respect to the correctness of information in this document. Copying for private or commercial purposes, in part or in whole, is not permitted unless authorised by Volkswagen AG.

Technical information should always be available to the foremen and mechanics, because their careful and constant adherence to the instructions is essential to ensure vehicle road-worthiness and safety. In addition, the normal basic safety precautions for working on motor vehicles must, as a matter of course, be observed.

All rights reserved.
No reproduction without prior agreement from publisher.

Copyright © 2010 Volkswagen AG, Wolfsburg

# Contents

**00 - Technical data . . . 1**
- **1 Gearbox identification . . . 1**
- 1.1 Gearbox identification . . . 1
- 1.2 Code letters, gearbox allocation, ratios, capacities . . . 2
- 1.3 Code letters, gearbox allocation, ratios, capacities 2 . . . 9
- **2 Transmission layout . . . 18**
- 2.1 Transmission layout . . . 18
- **3 Calculating overall ratio "i" . . . 20**
- 3.1 Calculating overall ratio "i" . . . 20
- **4 General repair instructions . . . 20**
- 4.1 General repair instructions . . . 20

**30 - Clutch . . . 22**
- **1 Servicing clutch control . . . 22**
- 1.1 Servicing clutch control . . . 22
- 1.2 Checking clutch cable function . . . 25
- 1.3 Removing and installing clutch cable (up to 26.04.95) . . . 27
- 1.4 Modifications to clutch cable (from 27.04.95) . . . 30
- 1.5 Removing and installing clutch cable (from 27.04.95) . . . 31
- 1.6 Clutch cable on RHD vehicles (from 27 04. 95) . . . 35
- 1.7 Removing and installing clutch pedal . . . 37
- **2 Servicing clutch release mechanism . . . 40**
- 2.1 Servicing clutch release mechanism . . . 40
- **3 Servicing clutch . . . 45**
- 3.1 Servicing clutch . . . 45

**34 - Controls, Housing . . . 51**
- **1 Servicing selector mechanism (rod selector mechanism) . . . 51**
- 1.1 Servicing selector mechanism (rod selector mechanism) . . . 51
- 1.2 I - Servicing gear stick housing and selector rod . . . 52
- 1.3 Installing gear stick gaiter to gear stick knob . . . 55
- 1.4 II - Servicing gear stick and cable . . . 56
- 1.5 Removing and installing gear change mechanism . . . 60
- 1.6 Adjusting selector mechanism (rod selector mechanism) . . . 64
- **2 Servicing selector mechanism (cable selector mechanism) . . . 68**
- 2.1 Servicing selector mechanism (cable selector mechanism) . . . 68
- 2.2 Installation position of gear selector mechanism . . . 68
- 2.3 I - Servicing gear stick housing . . . 70
- 2.4 Installing gear stick gaiter to gear stick knob . . . 72
- 2.5 II - Servicing gear stick . . . 73
- 2.6 III - Assembly overview - removing and installing - selector cables . . . 76
- 2.7 Removing and installing gear selector mechanism . . . 82
- 2.8 Adjusting gear selector mechanism (cable control gear selection) . . . 84
- **3 Removing and installing gearbox . . . 87**
- 3.1 Removing and installing gearbox . . . 87
- **4 Checking gear oil . . . 102**
- 4.1 Checking gear oil . . . 102
- **5 Dismantling and assembling gearbox . . . 103**
- 5.1 Dismantling and assembling gearbox . . . 103
- 5.2 Dismantling and assembling sequence . . . 111
- **6 Servicing clutch housing . . . 125**
- 6.1 Servicing clutch housing . . . 125

Protected by copyright. Copyright by Volkswagen AG. Reproduction, distribution, or use, for commercial purposes, in any form, is not authorised by Volkswagen AG. Volkswagen AG does not guarantee or accept any liability with respect to the correctness of information in this document.
satelettronica

7 Adjusting selector finger and selector sleeve . . . . . 134
7.1 Adjusting selector finger and selector sleeve . . . . . 134

35 - Gears, Shafts . . . . . 136
1 Dismantling and assembling input shaft . . . . . 136
1.1 Dismantling and assembling input shaft . . . . . 136
2 Adjusting input shaft . . . . . 145
2.1 Adjusting input shaft . . . . . 145
3 Dismantling and assembling output shaft . . . . . 148
3.1 Dismantling and assembling output shaft . . . . . 148
4 Adjusting output shaft . . . . . 163
4.1 Adjusting output shaft . . . . . 163

39 - Final drive, Differential rear . . . . . 166
1 Renewing selector shaft seal with gearbox in situ . . . . . 166
1.1 Renewing selector shaft seal with gearbox in situ . . . . . 166
2 Renewing oil seals for flanged shafts with gearbox installed . . . . . 168
2.1 Renewing oil seals for flanged shafts with gearbox installed . . . . . 168
3 Dismantling and assembling differential . . . . . 170
3.1 Dismantling and assembling differential . . . . . 170
3.2 Removing and installing final drive gear wheel . . . . . 177
4 Adjustment overview . . . . . 180
4.1 Adjustment overview . . . . . 180
5 Adjusting differential . . . . . 180
5.1 Adjusting differential . . . . . 180

Protected by copyright. Copying for private or commercial purposes, in part or in whole, is not permitted unless authorised by Volkswagen AG. Volkswagen AG does not guarantee or accept any liability with respect to the correctness of information in this document. Copyright by Volkswagen AG.
satelettronica

# 00 - Technical data

## 1 - Gearbox identification

### 1.1 - Gearbox identification

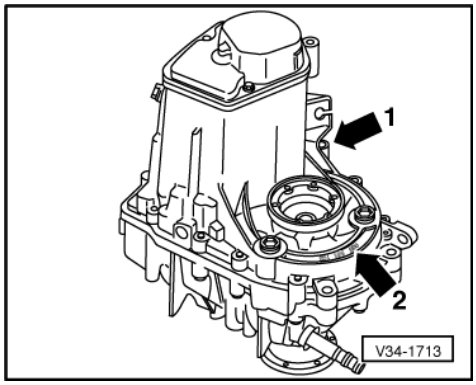


-> Location on gearbox

The manual gearbox 085 is installed in the Polo 1995 ‣in conjunction with the 4-Cyl. engine.

Code letters and date of manufacture (arrow 1)
Manual gearbox 085 (arrow 2)

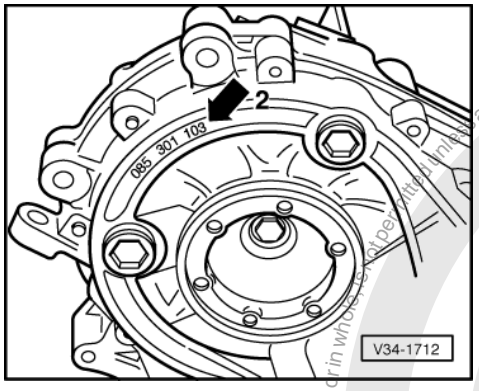


-> Manual gearbox 085 (arrow 2)

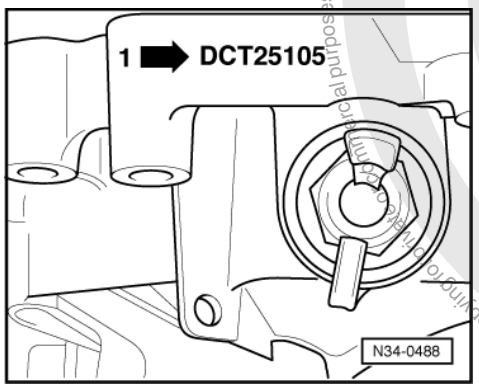


satelettronica
Protected by copyright. Copying for private or commercial purposes, in part or in whole, is not permitted unless authorised by Volkswagen AG. Volkswagen AG does not guarantee or accept any liability with respect to the correctness of information in this document. Copyright by Volkswagen AG.

-> Code letters and date of manufacture of gearbox

(arrow 1)

| Example: | DCT | 25 | 10 | 5 |
|---|---|---|---|---|
| | I | I | I | I |
| | I | I | I | I |
| | Code letters | Day | Month | Year (1995) of manufacture |

Additional data depends on manufacture.

*Note:*

*The gearbox code letters are also shown on the vehicle identification plates.*

## 1.2 - Code letters, gearbox allocation, ratios, capacities

| Manual gearbox | | 5-Speed 085 | | |
|---|---|---|---|---|
| Code letters | | CJC | CKE 1) | CLJ |
| Manufactured | from<br>to | 06.94<br>09.94 | 06.94<br>09.94 | 06.94<br>09.94 |
| Allocation | Model | Polo 1995 ▸ | Polo 1995 ▸ | Polo 1995 ▸ |
| | Engine | 1.3 l - 40 kW | 1.6 l - 55 kW | 1.6 l - 55 kW |
| Ratio: Z2 : Z1 | Final drive | 62 : 16 = 3.875 | 61 : 17 = 3.588 | 61 : 17 = 3.588 |
| | 1st gear | 38 : 11 = 3.455 | 38 : 11 = 3.455 | 38 : 11 = 3.455 |
| | 2nd gear | 44 : 21 = 2.095 | 43 : 22 = 1.955 | 44 : 21 = 2.095 |
| | 3rd gear | 42 : 29 = 1.448 | 40 : 32 = 1.250 | 42 : 29 = 1.448 |
| | 4th gear | 45 : 41 = 1.098 | 41 : 46 = 0.891 | 45 : 41 = 1.098 |
| | 5th gear | 40 : 47 = 0.851 | 37 : 50 = 0.740 | 40 : 47 = 0.851 |
| | 6th gear | - | - | - |
| | Reverse gear | 44 : 13 = 3.384 | 44 : 13 = 3.384 | 44 : 13 = 3.384 |
| | Speedometer drive | 12 : 20 = 0.600 | 12 : 20 = 0.600 | 12 : 20 = 0.600 |

1) France

| Code letters | CJC | CKE | CLJ |
|---|---|---|---|
| Capacity | 3.1 ltr. | | |
| Specification | Gearbox oil G 50 SAE 75W-90 (Synthetic oil) | Gearbox oil G 50 SAE 75W-90 (Synthetic oil) | Gearbox oil G 50 SAE 75W-90 (Synthetic oil) |
| Clutch control | Mechanical | Mechanical | Mechanical |
| Clutch plate ø | 190 mm | 200 mm | 200 mm |
| Drive shaft flange ø | 90 mm | 90 mm | 90 mm |
| Overall ratio in top gear | 3.289 | 2.655 | 3.053 |

| Manual gearbox | | 5-Speed 085 | | |
|---|---|---|---|---|
| Code letters | | CWN | CWS | CWT |
| Manufactured | from<br>to | 09.94<br>12.95 | 09.94<br>07.95 | 09.94<br>07.95 |

satelettronica
Protected by copyright. Copying for private or commercial purposes, in part or in whole, is not permitted unless authorised by Volkswagen AG. Volkswagen AG does not guarantee or accept any liability with respect to the correctness of information in this document. Copyright by Volkswagen AG.

| Manual gearbox | | 5-Speed 085 | | |
|---|---|---|---|---|
| Code letters | | CWN | CWS | CWT |
| Allocation | Model | Polo 1995 ▸ | Polo 1995 ▸ | Polo 1995 ▸ |
| | Engine | 1.05 ltr. - 33 kW | 1.6 ltr. - 55 kW | 1.9 ltr. - 47 kW Diesel |
| Ratio: Z2 : Z1 | Final drive | 64 : 15 = 4.267 | 61 : 17 = 3.588 | 61 : 17 = 3.588 |
| | 1st gear | 38 : 11 = 3.455 | 38 : 11 = 3.455 | 38 : 11 = 3.455 |
| | 2nd gear | 44 : 21 = 2.095 | 43 : 22 = 1.955 | 43 : 22 =1.955 |
| | 3rd gear | 42 : 29 = 1.448 | 40 : 32 = 1.250 | 40 : 32 = 1.250 |
| | 4th gear | 45 : 41 = 1.098 | 41 : 46 = 0.891 | 41 : 46 = 0.891 |
| | 5th gear | 41 : 46 = 0.891 | 37 : 50 = 0.740 | 37 : 50 = 0.740 |
| | 6th gear | - | - | - |
| | Reverse gear | 44 : 13 = 3.384 | 44 : 13 = 3.384 | 44 : 13 = 3.384 |
| | Speedometer drive | 12 : 20 = 0.600 | 12 : 20 = 0.600 | 12 : 20 = 0.600 |

| Code letters | CWN | CWS | CWT |
|---|---|---|---|
| Capacity | 3.1 ltr. 1) | | |
| Specification | Gearbox oil G 50 SAE 75W-90 (Synthetic oil) | Gearbox oil G 50 SAE 75W-90 (Synthetic oil) | Gearbox oil G 50 SAE 75W-90 (Synthetic oil) |
| Clutch control | Mechanical | Mechanical | Mechanical |
| Clutch plate ø | 190 mm | 200 mm | 175 mm2) |
| Drive shaft flange ø | 90 mm | 90 mm | 90 mm |
| Overall ratio in top gear | 3.802 | 2.655 | 2.655 |

1) From gearbox build date 23 10 5 the oil capacity has been reduced to 2.7 ltr., => Page 108 modification for gearbox housing

2) Two-part flywheel

| Manual gearbox | | 5-Speed 085 | | |
|---|---|---|---|---|
| Code letters | | CWU | CWV | CZG |
| Manufactured | from<br>to | 09.94<br>07.95 | 09.94<br>07.95 | 08.95<br>12.95 |
| Allocation | Model | Polo 1995 ▸ | Polo 1995 ▸ | Polo 1995 ▸ |
| | Engine | 1.3 ltr. - 40 kW | 1.6 ltr. - 55 kW | 1.6 ltr. - 55 kW |
| Ratio: Z2 : Z1 | Final drive | 62 : 16 = 3.875 | 61 : 17 = 3.588 | 60 : 18 = 3.333 |
| | 1st gear | 38 : 11 = 3.455 | 38 : 11 = 3.455 | 38 : 11 = 3.455 |
| | 2nd gear | 44 : 21 = 2.095 | 44 : 21 = 2.095 | 44 : 21 = 2.095 |
| | 3rd gear | 42 : 29 = 1.448 | 42 : 29 = 1.448 | 42 : 29 = 1.448 |
| | 4th gear | 45 : 41 = 1.098 | 45 : 41 = 1.098 | 45 : 41 = 1.098 |
| | 5th gear | 40 : 47 = 0.851 | 40 : 47 = 0.851 | 41 : 46 = 0.891 |
| | 6th gear | - | - | - |
| | Reverse gear | 44 : 13 = 3.384 | 44 : 13 = 3.384 | 44 : 13 = 3.384 |
| | Speedometer drive | 12 : 20 = 0.600 | 12 : 20 = 0.600 | 12 : 20 = 0.600 |

| Code letters | CWU | CWV | CZG |
|---|---|---|---|
| Capacity | 3.1 ltr. 1) | | |
| Specification | Gearbox oil G 50 SAE 75W-90 (Synthetic oil) | Gearbox oil G 50 SAE 75W-90 (Synthetic oil) | Gearbox oil G 50 SAE 75W-90 (Synthetic oil) |

Protected by copyright. Copying for private or commercial purposes, in part or in whole, is not permitted unless authorised by Volkswagen AG. Volkswagen AG does not guarantee or assume any liability with respect to the correctness of information in this document. Copyright by Volkswagen AG
satelettronica

| Code letters | CWU | CWV | CZG |
|---|---|---|---|
| Clutch control | Mechanical | Mechanical | Mechanical |
| Clutch plate ø | 190 mm | 200 mm | 200 mm |
| Drive shaft flange ø | 90 mm | 90 mm | 90 mm |
| iOverall ratio in top gear | 3.298 | 3.053 | 2.970 |

1) From gearbox build date 23 10 5 the oil capacity has been reduced to 2.7 ltr., => Page 108 modification for gearbox housing

| Manual gearbox | | 5-Speed 085 | | |
|---|---|---|---|---|
| Code letters | | DCT 1) | DDH | DDJ |
| Manufactured | from<br>to | 08.95<br>12.95 | 08.95<br>12.95 | 08.95<br>12.95 |
| Allocation | Model | Polo 1995 ▸ | Polo 1995 ▸ | Polo 1995 ▸ |
| | Engine | 1.9 ltr. - 47 kW Diesel | 1.4 ltr. - 40 kW<br>1.4 ltr. - 44 kW | 1.6 ltr. - 55 kW |
| Ratio: Z2 : Z1 | Final drive | 61 :17 = 3.588 | 62 : 16 = 3.875 | 61 : 17 = 3.588 |
| | 1st gear | 38 : 11 = 3.455 | 38 : 11 = 3.455 | 38 : 11 = 3.455 |
| | 2nd gear | 43 : 22 = 1.955 | 43 : 22 = 1.955 | 43 : 22 = 1.955 |
| | 3rd gear | 39 : 33 = 1.182 | 40 : 32 = 1.250 | 40 : 32 = 1.250 |
| | 4th gear | 40 : 47 = 0.851 | 42 : 45 = 0.933 | 42 : 45 = 0.933 |
| | 5th gear | 36 : 51 = 0.706 | 37 : 50 = 0.740 | 37 : 50 = 0.740 |
| | 6th gear | - | - | - |
| | Reverse gear | 44 : 13 = 3.384 | 44 : 13 = 3.384 | 44 : 13 = 3.384 |
| | Speedometer drive | 12 : 20 = 0.600 | 12 : 20 = 0.600 | 12 : 20 = 0.600 |

1) Cable control gear selection =>Page 68

| Code letters | DCT | DDH | DDJ |
|---|---|---|---|
| Capacity | 3.1 litre 2) | | |
| Specification | Gearbox oil G 50 SAE 75W-90 (Synthetic oil) | Gearbox oil G 50 SAE 75W-90 (Synthetic oil) | Gearbox oil G 50 SAE 75W-90 (Synthetic oil) |
| Clutch control | Mechanical | Mechanical | Mechanical |
| Clutch plate ø | 175 mm 3) | 190 mm | 200 mm |
| Drive shaft flange ø | 90 mm | 90 mm | 90 mm |
| Overall ratio in top gear | 2.533 | 2.868 | 2.655 |

2) From gearbox build date 23 10 5 the oil capacity has been reduced to 2.7 ltr., => Page 108 modification for gearbox housing

3) Two-part flywheel

| Manual gearbox | | 5-Speed 085 | | |
|---|---|---|---|---|
| Code letters | | CWL | CWX 1) | DCA2) |
| Manufactured | from<br>to | 10.95<br>12.95 | 06.96<br>09.98 | 01.96<br>09.98 |
| Allocation | Model | Polo 1995 ▸ | Polo 1995 ▸ | Polo 1995 ▸ |
| | Engine | 1.05 ltr. - 33 kW | 1.4 ltr. - 74 kW | 1.05 ltr. - 33 kW |
| Ratio: Z2 : Z1 | Final drive | 64 : 15 = 4.267 | 62 : 16 = 3.875 | 64 : 15 = 4.267 |
| | 1st gear | 38 : 11 = 3.455 | 38 : 11 = 3.455 | 38 : 11 = 3.455 |

Copyright by Volkswagen AG. Volkswagen AG does not guarantee or accept any liability with respect to the correctness of information in this document. Copyright by Volkswagen AG. Protected by copyright. Copying, distribution and utilisation is not permitted unless authorised by Volkswagen AG. Volkswagen AG does not guarantee or accept any liability with respect to the correctness of information in this document. Copyright by Volkswagen AG. Protected by copyright. Copying, distribution and utilisation is not permitted unless authorised by Volkswagen AG.

satelettronica

| | | | | |
|---|---|---|---|---|
| | 2nd gear | 43 : 22 = 1.955 | 44 : 21 = 2.095 | 43 : 22 = 1.955 |
| | 3rd gear | 40 : 32 = 1.250 | 42 : 29 = 1.448 | 40 : 32 = 1.250 |
| | 4th gear | 41 : 46 = 0.891 | 45 : 41 = 1.098 | 41 : 46 = 0.891 |
| | 5th gear | 37 : 50 = 0.740 | 41 : 46 = 0.891 | 37 : 50 = 0.740 |
| | 6th gear | - | - | - |
| | Reverse gear | 44 : 13 = 3.384 | 44 : 13 = 3.384 | 44 : 13 = 3.384 |
| | Speedometer drive | 12 : 20 = 0.600 | 12 : 20 = 0.600 | 12 : 20 = 0.600 |

1) Cable control gear selection =>Page 68

2) Sun differential wheels larger; allocate components via parts catalogue

| Code letters | CWL | CWX | DCA |
|---|---|---|---|
| Capacity | 3.1 litre3) | 2.7 litre | |
| Specification | Gearbox oil G 50 SAE 75W-90 (Synthetic oil) | Gearbox oil G51SAE 75W-90 (Synthetic oil) 4) | Gearbox oil G 50 SAE 75W-90 (Synthetic oil) |
| Clutch control | Mechanical | Mechanical | Mechanical |
| Clutch plate ø | 190 mm | 200 mm | 190 mm |
| Drive shaft flange ø | 90 mm | 90 mm | 90 mm |
| Overall ratio in top gear | 3.158 | 3.453 | 3.158 |

3) From gearbox build date 23 10 5 the oil capacity has been reduced to 2.7 ltr., => Page 108 modification for gearbox housing

4) This gearbox may only be topped up using gear oil G 51.

| Manual gearbox | | 5-Speed 085 | | |
|---|---|---|---|---|
| Code letters | | DCC | DCD | DCH1) |
| Manufactured | from<br>to | 01.96<br>08.96 | 01.96<br>08.96 | 01.96<br>09.98 |
| Allocation | Model | Polo 1995 ▸ | Polo 1995 ▸ | Polo 1995 ▸ |
| | Engine | 1.6 ltr. - 55 kW | 1.05 ltr. - 33 kW | 1.9 ltr. - 47 kW Diesel |
| Ratio: Z2 : Z1 | Final drive | 60 : 18 = 3.333 | 64 : 15 = 4.267 | 61 : 17 = 3.588 |
| | 1st gear | 38 : 11 = 3.455 | 38 : 11 = 3.455 | 38 : 11 = 3.455 |
| | 2nd gear | 44 : 21 = 2.095 | 44 : 21 = 2.095 | 43 : 22 = 1.955 |
| | 3rd gear | 42 : 29 = 1.448 | 42 : 29 = 1.448 | 39 : 33 = 1.182 |
| | 4th gear | 45 : 41 = 1.098 | 45 : 41 = 1.098 | 40 : 47 = 0.851 |
| | 5th gear | 41 : 46 = 0.891 | 41 : 46 = 0.891 | 36 : 51 = 0.706 |
| | 6th gear | - | - | - |
| | Reverse gear | 44 : 13 = 3.384 | 44 : 13 = 3.384 | 44 : 13 = 3.384 |
| | Speedometer drive | 12 : 20 = 0.600 | 12 : 20 = 0.600 | 12 : 20 = 0.600 |

From 01.96 larger sun differential wheels; allocate components via parts catalogue

1) Cable control gear selection =>Page 68

| Code letters | DCC | DCD | DCH |
|---|---|---|---|
| Capacity | 2.7 litre | | |
| Specification | Gearbox oil G 50 SAE 75W-90 (Synthetic oil) | Gearbox oil G 50 SAE 75W-90 (Synthetic oil) | Gearbox oil G 50 SAE 75W-90 (Synthetic oil) |

Protected by copyright. Copying for private or commercial purposes, in part or in whole, is not permitted unless authorised by Volkswagen AG. Volkswagen AG does not guarantee or accept any liability with respect to the correctness of information in this document.
satelettronica

| Code letters | DCC | DCD | DCH |
|---|---|---|---|
| Clutch control | Mechanical | Mechanical | Mechanical |
| Clutch plate ø | 200 mm | 190 mm | 175 mm2) |
| Drive shaft flange ø | 90 mm | 90 mm | 90 mm |
| Overall ratio in top gear | 2.969 | 3.802 | 2.533 |

2) Two-part flywheel

| Manual gearbox | | 5-Speed 085 | | |
|---|---|---|---|---|
| Code letters | | DCG | DCJ | DHB |
| Manufactured | from<br>to | 01.96<br>08.96 | 01.96<br>09.98 | 01.96<br>08.96 |
| Allocation | Model | Polo 1995 ▸ | Polo 1995 ▸ | Polo 1995 ▸ |
| | Engine | 1.6 ltr. - 55 kW | 1.3 ltr. - 40 kW | 1.4 ltr. - 40 kW<br>1.4 ltr. - 44 kW |
| Ratio: Z2 : Z1 | Final drive | 61 : 17 = 3.588 | 62 : 16 = 3.875 | 62 : 16 = 3.875 |
| | 1st gear | 38 : 11 = 3.455 | 38 : 11 = 3.455 | 38 : 11 = 3.455 |
| | 2nd gear | 43 : 22 = 1.955 | 44 : 21 = 2.095 | 43 : 22 = 1.955 |
| | 3rd gear | 40 : 32 = 1.250 | 42 : 29 = 1.448 | 40 : 32 = 1.250 |
| | 4th gear | 42 : 45 = 0.933 | 45 : 41 = 1.098 | 42 : 45 = 0.933 |
| | 5th gear | 37 : 50 = 0.740 | 40 : 47 = 0.851 | 37 : 50 = 0.740 |
| | 6th gear | - | - | - |
| | Reverse gear | 44 : 13 = 3.384 | 44 : 13 = 3.384 | 44 : 13 = 3.384 |
| | Speedometer drive | 12 : 20 = 0.600 | 12 : 20 = 0.600 | 12 : 20 = 0.600 |

| Code letters | DCG | DCJ | DHB |
|---|---|---|---|
| Capacity | 2.7 litre | | |
| Specification | Gearbox oil G 50 SAE 75W-90 (Synthetic oil) | Gearbox oil G 50 SAE 75W-90 (Synthetic oil) | Gearbox oil G 50 SAE 75W-90 (Synthetic oil) |
| Clutch control | Mechanical | Mechanical | Mechanical |
| Clutch plate ø | 200 mm | 190 mm | 190 mm |
| Drive shaft flange ø | 90 mm | 90 mm | 90 mm |
| Overall ratio in top gear | 2.655 | 3.298 | 2.868 |

| Manual gearbox | | 5-Speed 085 | | |
|---|---|---|---|---|
| Code letters | | DED1) | DKC1) | DKE1) |
| Manufactured | from<br>to | 05.96<br>09.98 | 08.96<br>09.98 | 08.96<br>09.98 |
| Allocation | Model | Polo 1995 ▸ | Polo 1995 ▸ | Polo 1995 ▸ |
| | Engine | 1.9 ltr. - 47 kW Diesel<br>1.7 l - 44 kW Diesel | 1.0 ltr. - 37 kW | 1.6 ltr. - 55 kW |
| Ratio: Z2 : Z1 | Final drive | 60 : 18 = 3.333 | 64 : 15 = 4.267 | 61 : 17 = 3.588 |
| | 1st gear | 38 : 11 = 3.455 | 38 : 11 = 3.455 | 38 : 11 = 3.455 |
| | 2nd gear | 43 : 22 = 1.955 | 43 : 22 = 1.955 | 43 : 22 = 1.955 |
| | 3rd gear | 40 : 32 = 1.250 | 40 : 32 = 1.250 | 40 : 32 = 1.250 |
| | 4th gear | 42 : 45 = 0.933 | 41 : 46 = 0.891 | 42 : 45 = 0.933 |
| | 5th gear | 37 : 50 = 0.740 | 37 : 50 = 0.740 | 37 : 50 = 0.740 |

Protected by copyright. Copying for private or commercial purposes, in part or in whole, is not permitted unless authorised by Volkswagen AG. Volkswagen AG does not guarantee or accept any liability with respect to the correctness of information in this document. Copyright by Volkswagen AG.
satelettronica

| Manual gearbox | | 5-Speed 085 | | |
|---|---|---|---|---|
| | 6th gear | - | - | - |
| | Reverse gear | 44 : 13 = 3.384 | 44 : 13 = 3.384 | 44 : 13 = 3.384 |
| | Speedometer drive | 12 : 20 = 0.600 | 12 : 20 = 0.600 | 12 : 20 = 0.600 |

1) Cable control gear selection =>Page 68

| Code letters | DED | DKC | DKE |
|---|---|---|---|
| Capacity | 2.7 litre | | |
| Specification | Gearbox oil G 50 SAE 75W-90 (Synthetic oil) | Gearbox oil G 50 SAE 75W-90 (Synthetic oil) | Gearbox oil G 50 SAE 75W-90 (Synthetic oil) |
| Clutch control | Mechanical | Mechanical | Mechanical |
| Clutch plate ø | 190 mm | 190 mm | 200 mm |
| Drive shaft flange ø | 90 mm | 90 mm | 90 mm |
| Overall ratio in top gear | 2.466 | 3.158 | 2.655 |

| Manual gearbox | | 5-Speed 085 | | |
|---|---|---|---|---|
| Code letters | | DKF | DKG | DPX |
| Manufactured | from<br>to | 08.96<br>09.98 | 08.96<br>09.98 | 01.97<br>09.98 |
| Allocation | Model | Polo 1995 ‣ | Polo 1995 ‣ | Polo 1995 ‣ |
| | Engine | 1.4 ltr. - 40 kW<br>1.4 ltr. - 44 kW<br>1.4 ltr. - 51 kW | 1.0 ltr. - 37 kW | 1.7 ltr. - 42 kW<br>Diesel |
| Ratio: Z2 : Z1 | Final drive | 62 : 16 = 3.875 | 65 : 16 = 4.063 | 61 : 17 = 3.588 |
| | 1st gear | 38 : 11 = 3.455 | 38 : 11 = 3.455 | 38 : 11 = 3.455 |
| | 2nd gear | 43 : 22 = 1.955 | 44 : 21 = 2.095 | 43 : 22 = 1.955 |
| | 3rd gear | 40 : 32 = 1.250 | 42 : 29 = 1.448 | 40 : 32 = 1.250 |
| | 4th gear | 42 : 45 = 0.933 | 45 : 41 = 1.098 | 42 : 45 = 0.933 |
| | 5th gear | 37 : 50 = 0.740 | 41 : 46 = 0.891 | 37 : 50 = 0.740 |
| | 6th gear | - | - | - |
| | Reverse gear | 44 : 13 = 3.384 | 44 : 13 = 3.384 | 44 : 13 = 3.384 |
| | Speedometer drive | 12 : 20 = 0.600 | 12 : 20 = 0.600 | 12 : 20 = 0.600 |

From 08.96 cable control gear selection =>Page 68

| Code letters | DKF | DKG | DPX |
|---|---|---|---|
| Capacity | 2.7 litre | | |
| Specification | Gearbox oil G 50 SAE 75W-90 (Synthetic oil) | Gearbox oil G 50 SAE 75W-90 (Synthetic oil) | Gearbox oil G 50 SAE 75W-90 (Synthetic oil) |
| Clutch control | Mechanical | Mechanical | Mechanical |
| Clutch plate ø | 190 mm1) | 190 mm | 190 mm |
| Drive shaft flange ø | 90 mm | 90 mm | 90 mm |
| Overall ratio in top gear | 2.868 | 3.802 | 2.655 |

1) 1.4 ltr. - 55 kW = 200 mmø

| Manual gearbox | 5-Speed 085 | | |
|---|---|---|---|
| Code letters | DQW | DSP1) | DSQ1) |

Protected by copyright. Copying for private or commercial purposes, in part or in whole, is not permitted unless authorised by Volkswagen AG. Volkswagen AG does not guarantee or accept any liability with respect to the correctness of information in this document. Copyright by Volkswagen AG.
satelettronica

| Manual gearbox | | 5-Speed 085 | | |
|---|---|---|---|---|
| Manufactured | from<br>to | 08.96<br>12.97 | 01.97<br>09.98 | 01.97<br>09.98 |
| Allocation | Model | Polo 1995 ▸ | Polo 1995 ▸ | Polo 1995 ▸ |
| | Engine | 1.4 ltr. - 44 kW | 1.4 ltr. - 74 kW | 1.6 ltr. - 55 kW |
| Ratio: Z2 : Z1 | Final drive | 62 : 16 = 3.875 | 62 : 16 = 3.875 | 61 : 17 = 3.588 |
| | 1st gear | 38 : 11 = 3.455 | 38 : 11 = 3.455 | 38 : 11 = 3.455 |
| | 2nd gear | 43 : 22 = 1.955 | 44 : 21 = 2.095 | 43 : 22 = 1.955 |
| | 3rd gear | 40 : 32 = 1.250 | 42 : 29 = 1.448 | 40 : 32 = 1.250 |
| | 4th gear | 42 : 45 = 0.933 | 45 : 41 = 1.098 | 42 : 45 = 0.933 |
| | 5th gear | 37 : 50 = 0.740 | 41 : 46 = 0.891 | 37 : 50 = 0.740 |
| | 6th gear | - | - | - |
| | Reverse gear | 44 : 13 = 3.384 | 44 : 13 = 3.384 | 44 : 13 = 3.384 |
| | Speedometer drive | 12 : 20 = 0.600 | 12 : 20 = 0.600 | 12 : 20 = 0.600 |

1) For vehicles with EDL; differential reinforced. Allocate components via parts catalogue

| Code letters | DQW | DSP | DSQ |
|---|---|---|---|
| Capacity | 2.7 litre | | |
| Specification | Gearbox oil G 50 SAE 75W-90 (Synthetic oil) | Gearbox oil G51SAE 75W-90 (Synthetic oil) 2) | Gearbox oil G 50 SAE 75W-90 (Synthetic oil) |
| Clutch control | Mechanical | Mechanical | Mechanical |
| Clutch plate ø | 190 mm | 200 mm | 190 mm |
| Drive shaft flange ø | 90 mm | 90 mm | 90 mm |
| Overall ratio in top gear | 2.868 | 3.802 | 2.655 |

2) This gearbox may only be topped up using gear oil G 51.

| Manual gearbox | | 5-Speed 085 | | |
|---|---|---|---|---|
| Code letters | | DTX 1) | DWZ | DXD |
| Manufactured | from<br>to | 09.98<br>07.99 | 09.98<br>12.99 | 09.98<br>07.99 |
| Allocation | Model | Polo 1995 ▸ | Polo 1995 ▸ | Polo 1995 ▸ |
| | Engine | 1.6 ltr. - 88 kW | 1.0 ltr. - 37 kW | 1.0 ltr. - 37 kW |
| Ratio: Z2 : Z1 | Final drive | 54 : 15 = 3.600 | 64 : 15 = 4.267 | 65 : 16 = 4.063 |
| | 1st gear | 38 : 11 = 3.455 | 38 : 11 = 3.455 | 38 : 11 = 3.455 |
| | 2nd gear | 36 : 17 = 2.118 | 43 : 22 = 1.955 | 44 : 21 = 2.095 |
| | 3rd gear | 36 : 25 = 1.440 | 40 : 32 = 1.250 | 42 : 29 = 1.448 |
| | 4th gear | 37 : 34 = 1.088 | 41 : 46 = 0.891 | 45 : 41 = 1.098 |
| | 5th gear | 33 : 37 = 0.892 | 37 : 50 = 0.740 | 41 : 46 = 0.891 |
| | 6th gear | - | - | - |
| | Reverse gear | 44 : 13 = 3.384 | 44 : 13 = 3.384 | 44 : 13 = 3.384 |
| | Speedometer drive | 12 : 20 = 0.600 | 12 : 20 = 0.600 | 12 : 20 = 0.600 |

From 09.98 the selector mechanism within gearbox and synchronization 3rd/4th gear have been redesigned. Allocate components via parts catalogue.

1) For vehicles with EDL; differential reinforced. Allocate components via parts catalogue.

Protected by copyright. Copyright by Volkswagen AG. Volkswagen AG does not guarantee or accept any liability with respect to the correctness of information. Copying for private or commercial purposes, in part or in whole, is not permitted unless authorised by Volkswagen AG.
satelettronica

| Code letters | DTX | DWZ | DXD |
|---|---|---|---|
| Capacity | 2.7 litre | | |
| Specification | Gearbox oil G51SAE 75W-90 (Synthetic oil) 2) | Gearbox oil G 50 SAE 75W-90 (Synthetic oil) | Gearbox oil G 50 SAE 75W-90 (Synthetic oil) |
| Clutch control | Mechanical | Mechanical | Mechanical |
| Clutch plate ø | 200 mm | 190 mm | 190 mm |
| Drive shaft flange ø | 90 mm | 90 mm | 90 mm |
| Overall ratio in top gear | 3.211 | 3.158 | 3.802 |

2) This gearbox may only be topped up using gear oil G 51.

| Manual gearbox | | 5-Speed 085 | | |
|---|---|---|---|---|
| Code letters | | DXE | DXF | DXG |
| Manufactured | from<br>to | 09.98<br>10.99 | 09.98<br>07.99 | 09.98<br>07.99 |
| Allocation | Model | Polo 1995 ▸ | Polo 1995 ▸ | Polo 1995 ▸ |
| | Engine | 1.6 ltr. - 55 kW | 1.9 ltr. - 47 kW Diesel | 1.7 ltr. - 42 kW Diesel |
| Ratio: Z2 : Z1 | Final drive | 61 : 17 = 3.588 | 61 : 17 = 3.588 | 61 : 17 = 3.588 |
| | 1st gear | 38 : 11 = 3.455 | 38 : 11 = 3.455 | 38 : 11 = 3.455 |
| | 2nd gear | 43 : 22 = 1.955 | 43 : 22 = 1.955 | 43 : 22 = 1.955 |
| | 3rd gear | 40 : 32 = 1.250 | 39 : 33 = 1.182 | 40 : 32 = 1.250 |
| | 4th gear | 42 : 45 = 0.933 | 40 : 47 = 0.851 | 42 : 45 = 0.933 |
| | 5th gear | 37 : 50 = 0.740 | 36 : 51 = 0.706 | 37 : 50 = 0.740 |
| | 6th gear | - | - | - |
| | Reverse gear | 44 : 13 = 3.384 | 44 : 13 = 3.384 | 44 : 13 = 3.384 |
| | Speedometer drive | 12 : 20 = 0.600 | 12 : 20 = 0.600 | 12 : 20 = 0.600 |

| Code letters | DXE | DXF | DXG |
|---|---|---|---|
| Capacity | 2.7 litre | | |
| Specification | Gearbox oil G 50 SAE 75W-90 (Synthetic oil) | Gearbox oil G 50 SAE 75W-90 (Synthetic oil) | Gearbox oil G 50 SAE 75W-90 (Synthetic oil) |
| Clutch control | Mechanical | Mechanical | Mechanical |
| Clutch plate ø | 200 mm | 175 mm 1) | 190 mm |
| Drive shaft flange ø | 90 mm | 90 mm | 90 mm |
| Overall ratio in top gear | 2.655 | 2.533 | 2.655 |

1) Two-part flywheel

## 1.3 - Code letters, gearbox allocation, ratios, capacities 2

| Manual gearbox | | 5-Speed 085 | | |
|---|---|---|---|---|
| Code letters | | DXH 1) | DXJ | DXK |
| Manufactured | from<br>to | 09.98<br>07.99 | 09.98<br>07.99 | 09.98<br>07.99 |
| Allocation | Model | Polo 1995 ▸ | Polo 1995 ▸ | Polo 1995 ▸ |
| | Engine | 1.6 ltr. - 55 kW | 1.4 ltr. - 74 kW | 1.3 ltr. - 40 kW |

Protected by copyright. Copying for private or commercial purposes, in part or in whole, is not permitted unless authorised by Volkswagen AG. Volkswagen AG does not guarantee or accept any liability with respect to the correctness of information in this document. Copyright by Volkswagen AG.
satelettronica

| Manual gearbox | | 5-Speed 085 | | |
|---|---|---|---|---|
| Ratio: Z2 : Z1 | Final drive | 61 : 17 = 3.588 | 62 : 16 = 3.875 | 62 : 16 = 3.875 |
| | 1st gear | 38 : 11 = 3.455 | 38 : 11 = 3.455 | 38 : 11 = 3.455 |
| | 2nd gear | 43 : 22 = 1.955 | 44 : 21 = 2.095 | 44 : 21 = 2.095 |
| | 3rd gear | 40 : 32 = 1.250 | 42 : 29 = 1.448 | 42 : 29 = 1.448 |
| | 4th gear | 42 : 45 = 0.933 | 45 : 41 = 1.098 | 45 : 41 = 1.098 |
| | 5th gear | 37 : 50 = 0.740 | 41 : 46 = 0.891 | 40 : 47 = 0.851 |
| | 6th gear | - | - | - |
| | Reverse gear | 44 : 13 = 3.384 | 44 : 13 = 3.384 | 44 : 13 = 3.384 |
| | Speedometer drive | 12 : 20 = 0.600 | 12 : 20 = 0.600 | 12 : 20 = 0.600 |

1) For vehicles with EDL; differential reinforced. Allocate components via parts catalogue

| Code letters | DXH | DXJ | DXK |
|---|---|---|---|
| Capacity | 2.7 litre | | |
| Specification | Gearbox oil G 50 SAE 75W-90 (Synthetic oil) | Gearbox oil G51SAE 75W-90 (Synthetic oil) 2) | Gearbox oil G 50 SAE 75W-90 (Synthetic oil) |
| Clutch control | Mechanical | Mechanical | Mechanical |
| Clutch plate ø | 200 mm | 200 mm | 190 mm |
| Drive shaft flange ø | 90 mm | 90 mm | 90 mm |
| Overall ratio in top gear | 2.655 | 3.437 | 3.298 |

2) This gearbox may only be topped up using gear oil G 51.

| Manual gearbox | | 5-Speed 085 | | |
|---|---|---|---|---|
| Code letters | | DXM 1) | DXP | DXQ |
| Manufactured | from<br>to | 09.98<br>07.99 | 09.98<br>07.99 | 09.98<br>07.99 |
| Allocation | Model | Polo 1995 ▸ | Polo 1995 ▸ | Polo 1995 ▸ |
| | Engine | 1.4 ltr. - 74 kW | 1.4 ltr. - 40 kW<br>1.4 ltr. - 44 kW<br>1.4 ltr. - 55 kW | 1.7 ltr. - 44 kW Diesel<br>1.9 ltr. - 47 kW Diesel |
| Ratio: Z2 : Z1 | Final drive | 62 : 16 = 3.875 | 62 : 16 = 3.875 | 60 : 18 = 3.333 |
| | 1st gear | 38 : 11 = 3.455 | 38 : 11 = 3.455 | 38 : 11 = 3.455 |
| | 2nd gear | 44 : 21 = 2.095 | 43 : 22 = 1.955 | 43 : 22 = 1.955 |
| | 3rd gear | 42 : 29 = 1.448 | 40 : 32 = 1.250 | 40 : 32 = 1.250 |
| | 4th gear | 45 : 41 = 1.098 | 42 : 45 = 0.933 | 42 : 45 = 0.933 |
| | 5th gear | 41 : 46 = 0.891 | 37 : 50 = 0.740 | 37 : 50 = 0.740 |
| | 6th gear | - | - | - |
| | Reverse gear | 44 : 13 = 3.384 | 44 : 13 = 3.384 | 44 : 13 = 3.384 |
| | Speedometer drive | 12 : 20 = 0.600 | 12 : 20 = 0.600 | 12 : 20 = 0.600 |

1) For vehicles with EDL; differential reinforced. Allocate components via parts catalogue

| Code letters | DXM | DXP | DXQ |
|---|---|---|---|
| Capacity | 2.7 litre | | |
| Specification | Gearbox oil G51SAE 75W-90 (Synthetic oil) 2) | Gearbox oil G 50 SAE 75W-90 (Synthetic oil) | Gearbox oil G 50 SAE 75W-90 (Synthetic oil) |
| Clutch control | Mechanical | Mechanical | Mechanical |

Protected by copyright. Copying for private or commercial purposes, in any form and by any means, is not permitted without the express authorisation of Volkswagen AG. Volkswagen AG does not guarantee or accept any liability with respect to the correctness of information in this document. Copyright by Volkswagen AG.
satelettronica

| Code letters | DXM | DXP | DXQ |
|---|---|---|---|
| Clutch plate ø | 200 mm | 190 mm 3) | 190 mm |
| Drive shaft flange ø | 90 mm | 90 mm | 90 mm |
| Overall ratio in top gear | 3.453 | 2.868 | 2.466 |

2) This gearbox may only be topped up using gear oil G 51.

3) 1.4 ltr. - 55 kW = 200 mmø

| Manual gearbox | | 5-Speed 085 | | |
|---|---|---|---|---|
| Code letters | | DUY 1) | ERD | EQW |
| Manufactured | from<br>to | 05.99<br>07.99 | 12.98<br>07.99 | 12.98<br>07.99 |
| Allocation | Model | Polo 1995 ▸ | Polo 1995 ▸ | Polo 1995 ▸ |
| | Engine | 1.4 ltr. - 55 kW | 1.4 ltr. - 44 kW<br>1.4 ltr. - 40 kW | 1.0 ltr. - 37 kW |
| Ratio: Z2 : Z1 | Final drive | 62 : 16 = 3.875 | 62 : 16 = 3.875 | 65 : 16 = 4.063 |
| | 1st gear | 38 : 11 = 3.455 | 38 : 11 = 3.455 | 38 : 11 = 3.455 |
| | 2nd gear | 43 : 22 = 1.955 | 43 : 22 = 1.955 | 44 : 21 = 2.095 |
| | 3rd gear | 40 : 32 = 1.250 | 40 : 32 = 1.250 | 42 : 29 = 1.448 |
| | 4th gear | 42 : 45 = 0.933 | 42 : 45 = 0.933 | 45 : 41 = 1.098 |
| | 5th gear | 37 : 50 = 0.740 | 37 : 50 = 0.740 | 41 : 46 = 0.891 |
| | 6th gear | - | - | - |
| | Reverse gear | 44 : 13 = 3.384 | 44 : 13 = 3.384 | 44 : 13 = 3.384 |
| | Speedometer drive | 12 : 20 = 0.600 | 12 : 20 = 0.600 | 12 : 20 = 0.600 |

From 12.98 the selector mechanism within gearbox has been redesigned. Allocate components via parts catalogue.

1) For vehicles with EDL; differential reinforced. Allocate components via parts catalogue

| Code letters | DUY | ERD | EQW |
|---|---|---|---|
| Capacity | 2.7 litre | | |
| Specification | Gearbox oil G 50 SAE 75W-90 (Synthetic oil) | Gearbox oil G 50 SAE 75W-90 (Synthetic oil) | Gearbox oil G 50 SAE 75W-90 (Synthetic oil) |
| Clutch control | Mechanical | Mechanical | Mechanical |
| Clutch plate ø | 200 mm | 190 mm | 190 mm |
| Drive shaft flange ø | 90 mm | 90 mm | 90 mm |
| Overall ratio in top gear | 2.868 | 2.868 | 3.802 |

| Manual gearbox | | 5-Speed 085 | | |
|---|---|---|---|---|
| Code letters | | EQX | EQY | EQZ 1) |
| Manufactured | from<br>to | 12.98<br>07.99 | 12.98<br>07.99 | 12.98<br>07.99 |
| Allocation | Model | Polo 1995 ▸ | Polo 1995 ▸ | Polo 1995 ▸ |
| | Engine | 1.9 ltr. - 47 kW<br>Diesel | 1.6 ltr. - 55 kW | 1.6 ltr. - 55 kW |
| Ratio: Z2 : Z1 | Final drive | 61 : 17 = 3.588 | 61 : 17 = 3.588 | 61 : 17 = 3.588 |
| | 1st gear | 38 : 11 = 3.455 | 38 : 11 = 3.455 | 38 : 11 = 3.455 |
| | 2nd gear | 43 : 22 = 1.955 | 43 : 22 = 1.955 | 43 : 22 = 1.955 |

satelettronica

| | | | | |
|---|---|---|---|---|
| | 3rd gear | 39 : 33 = 1.182 | 40 : 32 = 1.250 | 40 : 32 = 1.250 |
| | 4th gear | 40 : 47 = 0.851 | 42 : 45 = 0.933 | 42 : 45 = 0.933 |
| | 5th gear | 36 : 51 = 0.706 | 37 : 50 = 0.740 | 37 : 50 = 0.740 |
| | 6th gear | - | - | - |
| | Reverse gear | 44 : 13 = 3.384 | 44 : 13 = 3.384 | 44 : 13 = 3.384 |
| | Speedometer drive | 12 : 20 = 0.600 | 12 : 20 = 0.600 | 12 : 20 = 0.600 |

1) For vehicles with EDL; differential reinforced. Allocate components via parts catalogue

| Code letters | EQX | EQY | EQZ |
|---|---|---|---|
| Capacity | 2.7 litre | | |
| Specification | Gearbox oil G 50 SAE 75W-90 (Synthetic oil) | Gearbox oil G 50 SAE 75W-90 (Synthetic oil) | Gearbox oil G 50 SAE 75W-90 (Synthetic oil) |
| Clutch control | Mechanical | Mechanical | Mechanical |
| Clutch plate ø | 175 mm 2) | 200 mm | 200 mm |
| Drive shaft flange ø | 90 mm | 90 mm | 90 mm |
| Overall ratio in top gear | 2.868 | 2.655 | 2.655 |

2) Two-part flywheel

| Manual gearbox | | 5-Speed 085 | | |
|---|---|---|---|---|
| Code letters | | ESY | ESZ | ETA |
| Manufactured | from<br>to | 07.99<br>07.01 | 07.99<br>11.99 | 07.99<br>11.99 |
| Allocation | Model | Polo 1995 ▸ | Polo 1995 ▸ | Polo 1995 ▸ |
| | Engine | 1.0 ltr. - 37 kW | 1.9 ltr. - 47 kW Diesel | 1.7 ltr. - 42 kW Diesel |
| Ratio: Z2 : Z1 | Final drive | 65 : 16 = 4.063 | 61 : 17 = 3.588 | 61 : 17 = 3.588 |
| | 1st gear | 38 : 11 = 3.455 | 38 : 11 = 3.455 | 38 : 11 = 3.455 |
| | 2nd gear | 44 : 21 = 2.095 | 43 : 22 = 1.955 | 43 : 22 = 1.955 |
| | 3rd gear | 42 : 29 = 1.448 | 39 : 33 = 1.182 | 40 : 32 = 1.250 |
| | 4th gear | 45 : 41 = 1.098 | 40 : 47 = 0.851 | 42 : 45 = 0.933 |
| | 5th gear | 33 : 37 = 0.892 | 37 : 50 = 0.740 | 41 : 46 = 0.891 |
| | 6th gear | - | - | - |
| | Reverse gear | 44 : 13 = 3.384 | 44 : 13 = 3.384 | 44 : 13 = 3.384 |
| | Speedometer drive | 12 : 20 = 0.600 | 12 : 20 = 0.600 | 12 : 20 = 0.600 |

From 07.99 reversing light switch with new connector housing; allocate switch via parts catalogue.

| Engine code | ESY | ESZ | ETA |
|---|---|---|---|
| Capacity | 2.7 litre | | |
| Specification | Gearbox oil G 50 SAE 75W-90 (Synthetic oil) | Gearbox oil G 50 SAE 75W-90 (Synthetic oil) | Gearbox oil G 50 SAE 75W-90 (Synthetic oil) |
| Clutch control | Mechanical | Mechanical | Mechanical |
| Clutch plate ø | 190 mm | 175 mm1) | 190 mm |
| Drive shaft flange ø | 90 mm | 90 mm | 90 mm |

Protected by copyright. Copying for private or commercial purposes, in part or in whole, is not permitted unless authorised by Volkswagen AG. Volkswagen AG does not guarantee or accept any liability with respect to the correctness of information in this document.
satelettronica

| Engine code | ESY | ESZ | ETA |
|---|---|---|---|
| Overall ratio in top gear | 3.802 | 2.533 | 2.655 |

1) Two-part flywheel

| Manual gearbox | | 5-Speed 085 | | |
|---|---|---|---|---|
| Engine code | | ETB | ETC 1) | ETD |
| Manufactured | from<br>to | 07.99<br>07.01 | 07.99<br>07.01 | 07.99<br>07.01 |
| Allocation | Model | Polo 1995 ▸ | Polo 1995 ▸ | Polo 1995 ▸ |
| | Engine | 1.4 ltr. - 74 kW | 1.4 ltr. - 74 kW | 1.4 ltr. - 40 kW<br>1.4 ltr. - 44 kW |
| Ratio: Z2 : Z1 | Final drive | 62 : 16 = 3.875 | 62 : 16 = 3.875 | 62 : 16 = 3.875 |
| | 1st gear | 38 : 11 = 3.455 | 38 : 11 = 3.455 | 38 : 11 = 3.455 |
| | 2nd gear | 44 : 21 = 2.095 | 44 : 21 = 2.095 | 43 : 22 = 1.955 |
| | 3rd gear | 42 : 29 = 1.448 | 42 : 29 = 1.448 | 40 : 32 = 1.250 |
| | 4th gear | 45 : 41 = 1.098 | 45 : 41 = 1.098 | 42 : 45 = 0.933 |
| | 5th gear | 41 : 46 = 0.891 | 41 : 46 = 0.891 | 37 : 50 = 0.740 |
| | 6th gear | - | - | - |
| | Reverse gear | 44 : 13 = 3.384 | 44 : 13 = 3.384 | 44 : 13 = 3.384 |
| | Speedometer drive | 12 : 20 = 0.600 | 12 : 20 = 0.600 | 12 : 20 = 0.600 |

1) For vehicles with EDL; differential reinforced. Allocate components via parts catalogue

| Engine code | ETB | ETC | ETD |
|---|---|---|---|
| Capacity | 2.7 litre | | |
| Specification | Gearbox oil G51SAE 75W-90 (Synthetic oil) 2) | Gearbox oil G51SAE 75W-90 (Synthetic oil) 2) | Gearbox oil G 50 SAE 75W-90 (Synthetic oil) |
| Clutch control | Mechanical | Mechanical | Mechanical |
| Clutch plate ø | 200 mm | 200 mm | 190 mm |
| Drive shaft flange ø | 90 mm | 90 mm | 90 mm |
| Overall ratio in top gear | 3.453 | 3.453 | 2.655 |

2) This gearbox may only be topped up using gear oil G 51.

| Manual gearbox | | 5-Speed 085 | | |
|---|---|---|---|---|
| Engine code | | ETE 1) | ETF | ETG 1) |
| Manufactured | from<br>to | 07.99<br>07.01 | 07.99<br>07.01 | 07.99<br>07.01 |
| Allocation | Model | Polo 1995 ▸ | Polo 1995 ▸ | Polo 1995 ▸ |
| | Engine | 1.4 ltr. - 55 kW | 1.7 ltr. - 44 kW Diesel<br>1.9 ltr. - 47 kW Diesel | 1.6 ltr. - 92 kW |
| Ratio: Z2 : Z1 | Final drive | 62 : 16 = 3,875 | 60 : 18 = 3.333 | 54 : 15 = 3.600 |
| | 1st gear | 38 : 11 = 3.455 | 38 : 11 = 3.455 | 38 : 11 = 3.455 |
| | 2nd gear | 43 : 22 = 1.955 | 43 : 22 = 1.955 | 36 : 17 = 2.118 |
| | 3rd gear | 40 : 32 = 1.250 | 40 : 32 = 1.250 | 36 : 25 = 1.440 |
| | 4th gear | 42 : 45 = 0.933 | 42 : 45 = 0.933 | 37 : 34 = 1.088 |
| | 5th gear | 37 : 50 = 0.740 | 37 : 50 = 0.740 | 33 : 37 = 0.892 |

Protected by copyright. Copyright by Volkswagen AG. Volkswagen AG does not guarantee or accept any liability with respect to the correctness of information in this document. Copyright by Volkswagen AG. Protected by copyright. Copying for private or commercial purposes, in part or in whole, is not permitted unless authorised by Volkswagen AG.
satelettronica

| | | | | |
|---|---|---|---|---|
| | 6th gear | - | - | - |
| | Reverse gear | 44 : 13 = 3.384 | 44 : 13 = 3.384 | 44 : 13 = 3.384 |
| | Speedometer drive | 12 : 20 = 0.600 | 12 : 20 = 0.600 | 12 : 20 = 0.600 |

1) For vehicles with EDL; differential reinforced. Allocate components via parts catalogue

| Engine code | ETE | ETF | ETG |
|---|---|---|---|
| Capacity | 2.7 litre | | |
| Specification | Gearbox oil G 50 SAE 75W-90 (Synthetic oil) | Gearbox oil G 50 SAE 75W-90 (Synthetic oil) | Gearbox oil G51SAE 75W-90 (Synthetic oil) 2) |
| Clutch control | Mechanical | Mechanical | Mechanical |
| Clutch plate ø | 200 mm | 190 mm | 200 mm |
| Drive shaft flange ø | 90 mm | 90 mm | 90 mm |
| Overall ratio in top gear | 2.868 | 2.466 | 3.211 |

2) This gearbox may only be topped up using gear oil G 51.

| Manual gearbox | | 5-Speed 085 | | |
|---|---|---|---|---|
| Code letters | | FDQ 1) | FDY | FFD 1) |
| Manufactured | from<br>to | 11.99 | 05.00<br>07.01 | 07.01 |
| Allocation | Model | Polo 1995 ▸ | Polo 1995 ▸ | Polo 1995 ▸ |
| | Engine | 1.7 ltr. - 44 kW Diesel | 1.0 ltr. - 37 kW | 1.0 ltr. - 37 kW |
| Ratio: Z2 : Z1 | Final drive | 60 : 18 = 3.333 | 64 : 15 = 4.267 | 64 : 15 = 4.267 |
| | 1st gear | 38 : 11 = 3.455 | 38 : 11 = 3.455 | 38 : 11 = 3.455 |
| | 2nd gear | 43 : 22 = 1.955 | 43 : 22 = 1.955 | 43 : 22 = 1.955 |
| | 3rd gear | 40 : 32 = 1.250 | 40 : 32 = 1.250 | 40 : 32 = 1.250 |
| | 4th gear | 42 : 45 = 0.933 | 42 : 45 = 0.933 | 42 : 45 = 0.933 |
| | 5th gear | 37 : 50 = 0.740 | 37 : 50 = 0.740 | 37 : 50 = 0.740 |
| | 6th gear | - | - | - |
| | Reverse gear | 37 : 11 = 3.364 | 44 : 13 = 3.384 | 37 : 11 = 3.364 |
| | Speedometer drive | 12 : 20 = 0.600 | 12 : 20 = 0.600 | 12 : 20 = 0.600 |

1) Differential reinforced. Allocate components via parts catalogue

| Code letters | FDQ | FDY | FFD |
|---|---|---|---|
| Capacity | 2.7 litre | | |
| Specification | Gearbox oil G 50 SAE 75W-90 (Synthetic oil) | Gearbox oil G 50 SAE 75W-90 (Synthetic oil) | Gearbox oil G 50 SAE 75W-90 (Synthetic oil) |
| Clutch control | Mechanical | Mechanical | Mechanical |
| Clutch plate ø | 190 mm | 190 mm | 190 mm |
| Drive shaft flange ø | 90 mm | 90 mm | 90 mm |
| Overall ratio in top gear | 2.466 | 3.158 | 3.158 |

| Manual gearbox | | 5-Speed 085 | | |
|---|---|---|---|---|
| Code letters | | FFE | FFF | FFL 1) |
| Manufactured | from<br>to | 07.01 | 07.01 | 07.01 |

Protected by copyright. Copying for private or commercial purposes, in part or in whole, is not permitted unless authorised by Volkswagen AG. Volkswagen AG does not guarantee or assume any liability with respect to the correctness of information in this document. Copyright by Volkswagen AG.

satelettronica

| Manual gearbox | | 5-Speed 085 | | |
|---|---|---|---|---|
| Allocation | Model | Polo 1995 ‣ | Polo 1995 ‣ | Polo 1995 ‣ |
| | Engine | 1.0 ltr. - 37 kW | 1.9 ltr. - 47 kW Diesel | 1.4 ltr. - 74 kW |
| Ratio: Z2 : Z1 | Final drive | 65 : 16 = 4.063 | 61 : 17 = 3.588 | 62 : 16 = 3.875 |
| | 1st gear | 38 : 11 = 3.455 | 38 : 11 = 3.455 | 38 : 11 = 3.455 |
| | 2nd gear | 44 : 21 = 2.095 | 43 : 22 = 1.955 | 44 : 21 = 2.095 |
| | 3rd gear | 42 : 29 = 1.448 | 39 : 33 = 1.182 | 42 : 29 = 1.448 |
| | 4th gear | 45 : 41 = 1.098 | 40 : 47 = 0.851 | 45 : 41 = 1.098 |
| | 5th gear | 41 : 46 = 0.891 | 36 : 51 = 0.706 | 41 : 46 = 0.891 |
| | 6th gear | - | - | - |
| | Reverse gear | 37 : 11 = 3.364 | 37 : 11 = 3.364 | 37 : 11 = 3.364 |
| | Speedometer drive | 12 : 20 = 0.600 | 12 : 20 = 0.600 | 12 : 20 = 0.600 |

From 07.01 differential reinforced. Allocate components via parts catalogue

1) For vehicles with EDL; differential reinforced. Allocate components via parts catalogue

| Code letters | FFE | FFF | FFL |
|---|---|---|---|
| Capacity | 2.7 litre | | |
| Specification | Gearbox oil G 50 SAE 75W-90 (Synthetic oil) | Gearbox oil G 50 SAE 75W-90 (Synthetic oil) | Gearbox oil G51SAE 75W-90 (Synthetic oil) 2) |
| Clutch control | Mechanical | Mechanical | Mechanical |
| Clutch plate ø | 190 mm | 175 mm 1) | 200 mm |
| Drive shaft flange ø | 90 mm | 90 mm | 90 mm |
| Overall ratio in top gear | 3.802 | 2.533 | 3.453 |

1) Two-part flywheel

2) This gearbox may only be topped up using gear oil G 51.

| Manual gearbox | | 5-Speed 085 | | |
|---|---|---|---|---|
| Code letters | | FFM | FFR | FFS 1) |
| Manufactured | from<br>to | 07.01 | 07.01 | 07.01 |
| Allocation | Model | Polo 1995 ‣ | Polo 1995 ‣ | Polo 1995 ‣ |
| | Engine | 1.4 ltr. - 74 kW | 1.4 ltr. - 40 kW<br>1.4 ltr. - 44 kW<br>1.4 ltr. - 55 kW | 1.4 ltr. - 55 kW |
| Ratio: Z2 : Z1 | Final drive | 62 : 16 = 3.875 | 62 : 16 = 3.875 | 62 : 16 = 3.875 |
| | 1st gear | 38 : 11 = 3.455 | 38 : 11 = 3.455 | 38 : 11 = 3.455 |
| | 2nd gear | 44 : 21 = 2.095 | 43 : 22 = 1.955 | 43 : 22 = 1.955 |
| | 3rd gear | 42 : 29 = 1.448 | 40 : 32 = 1.250 | 40 : 32 = 1.250 |
| | 4th gear | 45 : 41 = 1.098 | 42 : 45 = 0.933 | 42 : 45 = 0.933 |
| | 5th gear | 41 : 46 = 0.891 | 37 : 50 = 0.740 | 37 : 50 = 0.740 |
| | 6th gear | - | - | - |
| | Reverse gear | 37 : 11 = 3.364 | 37 : 11 = 3.364 | 37 : 11 = 3.364 |
| | Speedometer drive | 12 : 20 = 0.600 | 12 : 20 = 0.600 | 12 : 20 = 0.600 |

1) For vehicles with EDL; differential reinforced. Allocate components via parts catalogue

Protected by copyright. Copying for private or commercial purposes, in part or in whole, is not permitted unless authorised by Volkswagen AG. Volkswagen AG does not guarantee or accept any liability with respect to the correctness of information in this document. Copyright by Volkswagen AG.

satelettronica

| Code letters | FFM | FFR | FFS |
|---|---|---|---|
| Capacity | 2.7 litre | | |
| Specification | Gearbox oil G51SAE 75W-90 (Synthetic oil) 2) | Gearbox oil G 50 SAE 75W-90 (Synthetic oil) | Gearbox oil G 50 SAE 75W-90 (Synthetic oil) |
| Clutch control | Mechanical | Mechanical | Mechanical |
| Clutch plate ø | 200 mm | 190 mm | 200 mm |
| Drive shaft flange ø | 90 mm | 90 mm | 90 mm |
| Overall ratio in top gear | 3.453 | 2.868 | 2.868 |

2) This gearbox may only be topped up using gear oil G 51.

| Manual gearbox | | 5-Speed 085 | | |
|---|---|---|---|---|
| Code letters | | FFV | FFW 1) | FHX 1) |
| Manufactured | from<br>to | 07.01 | 07.01 | 07.01 |
| Allocation | Model | Polo 1995 ▸ | Polo 1995 ▸ | Polo 1995 ▸ |
| | Engine | 1.9 ltr. - 47 kW Diesel | 1.6 ltr. - 92 kW | 1.4 ltr. - 74 kW |
| Ratio: Z2 : Z1 | Final drive | 60 : 18 = 3.333 | 54 : 15 = 3.600 | 62 : 16 = 3.875 |
| | 1st gear | 38 : 11 = 3.455 | 38 : 11 = 3.455 | 38 : 11 = 3.455 |
| | 2nd gear | 43 : 22 = 1.955 | 36 : 17 = 2.118 | 44 : 21 = 2.095 |
| | 3rd gear | 40 : 32 = 1.250 | 36 : 25 = 1.440 | 42 : 29 = 1.448 |
| | 4th gear | 42 : 45 = 0.933 | 37 : 34 = 1.088 | 45 : 41 = 1.098 |
| | 5th gear | 37 : 50 = 0.740 | 33 : 37 = 0.892 | 41 : 46 = 0.891 |
| | 6th gear | - | - | - |
| | Reverse gear | 37 : 11 = 3.364 | 37 : 11 = 3.364 | 37 : 11 = 3.364 |
| | Speedometer drive | 12 : 20 = 0.600 | 12 : 20 = 0.600 | 12 : 20 = 0.600 |

1) For vehicles with EDL; differential reinforced. Allocate components via parts catalogue

| Code letters | FFV | FFW | FHX |
|---|---|---|---|
| Capacity | 2.7 litre | | |
| Specification | Gearbox oil G 50 SAE 75W-90 (Synthetic oil) | Gearbox oil G51SAE 75W-90 (Synthetic oil) 2) | Gearbox oil G51SAE 75W-90 (Synthetic oil) 2) |
| Clutch control | Mechanical | Mechanical | Mechanical |
| Clutch plate ø | 190 mm | 200 mm | 200 mm |
| Drive shaft flange ø | 90 mm | 90 mm | 90 mm |
| Overall ratio in top gear | 2.466 | 3.211 | 3.453 |

2) This gearbox may only be topped up using gear oil G 51.

| Manual gearbox | | 5-Speed 085 |
|---|---|---|
| Code letters | | FHZ |
| Manufactured | from<br>to | 07.01 |
| Allocation | Model | Polo 1995 ▸ |
| | Engine | 1.4 ltr. - 74 kW |
| Ratio: Z2 : Z1 | Final drive | 62 : 16 = 3.875 |
| | 1st gear | 38 : 11 = 3.455 |

Volkswagen AG does not guarantee or accept any liability with respect to the correctness of information in this document. Copyright by Volkswagen AG.
Protected by copyright. Copying for private or commercial purposes, in part or in whole is not permitted unless authorised by Volkswagen AG.
satelettronica

| Manual gearbox | | 5-Speed 085 |
|---|---|---|
| | 2nd gear | 44 : 21 = 2.095 |
| | 3rd gear | 42 : 29 = 1.448 |
| | 4th gear | 45 : 41 = 1.098 |
| | 5th gear | 41 : 46 = 0.891 |
| | 6th gear | - |
| | Reverse gear | 37 : 11 = 3.364 |
| | Speedometer drive | 12 : 20 = 0.600 |

| Code letters | FHZ |
|---|---|
| Capacity | 2.7 litre |
| Specification | Gearbox oil G51SAE 75W-90 (Synthetic oil) 1) |
| Clutch control | mechanical |
| Clutch plate ø | 200 mm |
| Drive shaft flange ø | 90 mm |
| Overall ratio in top gear | 3.453 |

1) This gearbox may only be topped up using gear oil G 51.

satelettronica

Protected by copyright. Copying for private or commercial purposes, in part or in whole, is not permitted unless authorised by Volkswagen AG. Volkswagen AG does not guarantee or accept any liability with respect to the correctness of information in this document. Copyright by Volkswagen AG.

# 2 - Transmission layout

## 2.1 - Transmission layout

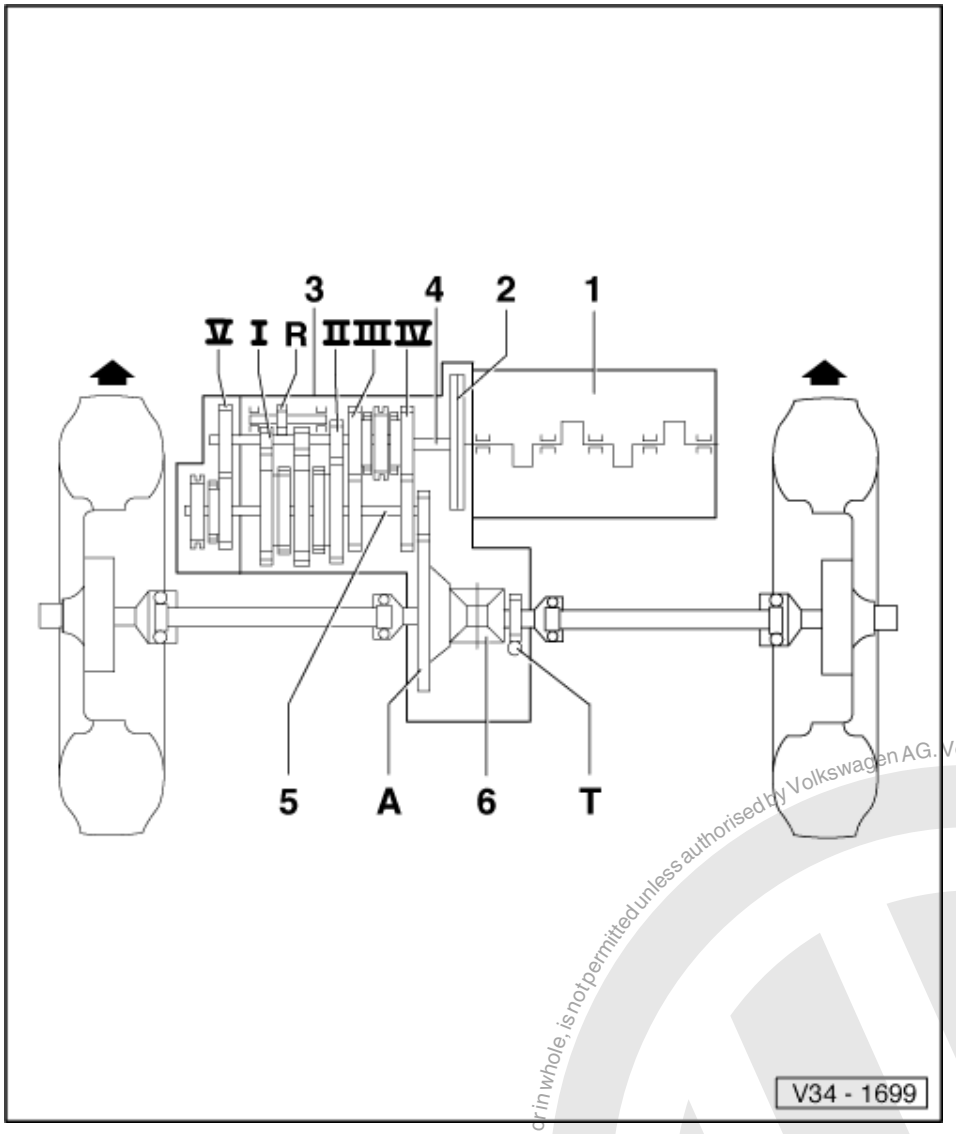


Designation

1 Engine
2 Clutch
3 Gearbox
4 Input shaft
5 Output shaft/pinion shaft
6 Differential

Arrows point in direction of travel

Protected by copyright. Copying for private or commercial purposes, in part or in whole, is not permitted unless authorised by Volkswagen AG. Volkswagen AG does not guarantee or accept any liability with respect to the correctness of information in this document. Copyright by Volkswagen AG.
satelettronica

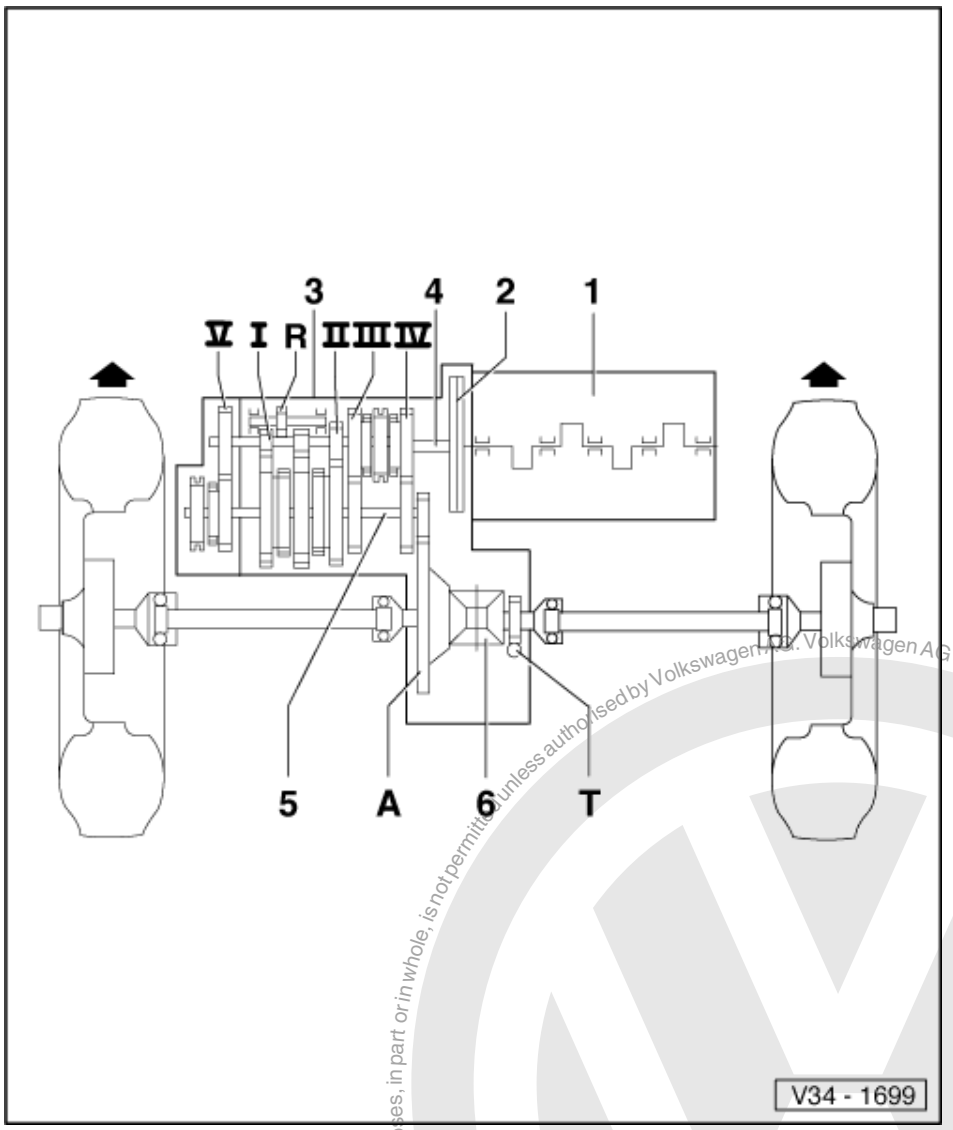


Gear ratios

| | |
|---|---|
| I | - 1st gear |
| II | - 2nd gear |
| III | - 3rd gear |
| IV | - 4th gear |
| V | - 5th gear |
| R | - Reverse gear |
| A | - Final drive |
| T | - Speedometer drive |

Arrows point in direction of travel

Protected by copyright. Copying for private or commercial purposes, in part or in whole, is not permitted unless authorised by Volkswagen AG. Volkswagen AG does not guarantee or accept any liability with respect to the correctness of information in this document. Copyright by Volkswagen AG.
satelettronica

# 3 - Calculating overall ratio "i"

## 3.1 - Calculating overall ratio "i"

Example:

| | 5th gear | Final drive |
|---|---|---|
| Drive gear | ZG1 = 47 | ZA1 = 16 |
| Driven gear | ZG2 = 40 | ZA2 = 62 |

i= Z2/ Z1 1)

iG = Gear ratio = ZG2: ZG1 = 40 : 47 = 0.851

iA = Axle ratio = ZA2 / ZA1 = 62 / 16 = 3.875

Overall ratio = total ratio
= iG x iA = 0.851 x 3.875 = 3.298

1) Z1 = No. of teeth driving gear, Z2 = No. of teeth driven gear

# 4 - General repair instructions

## 4.1 - General repair instructions

To ensure perfect and successful gearbox repairs, the greatest care and cleanliness as well as the use of good and proper tools is essential. Obviously, the basis rules for safety are also applicable during repair work.

A number of generally valid instructions applicable for the various repair procedures - which were previously repeated a number of times at numerous places in the Workshop Manual - are summarized here. They apply to this Workshop Manual.

Gearbox

- When installing ensure that the dowel sleeves between the engine and gearbox are correctly located.
- When changing a gearbox fill with gear oil to the lower edge of the filler hole.
- Capacities and specifications => from Page 2 .

Gaskets, sealing rings

- Thoroughly clean joint surfaces and apply sealant AMV 188 200 03.
- Apply sealant uniformly but not too thick.
- Renew paper gaskets.
- Renew "O-rings".
- Radial shaft oil seals.

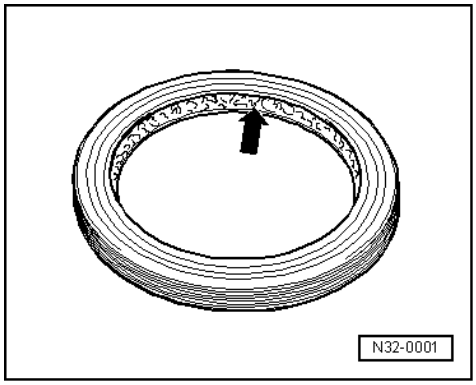


Protected by copyright. Copying for private or commercial purposes, in part or in whole, is not permitted unless authorised by Volkswagen AG. Volkswagen AG does not guarantee or accept any liability with respect to the correctness of information in this document. Copyright by Volkswagen AG.
satelettronica

**Before installing:**

-> Lightly oil outer edge, fill space between sealing lips (arrow) with grease.

**After installation:**

Check gearbox oil; if necessary top-up to lower edge of oil filler hole, specification =>from Page 2 .

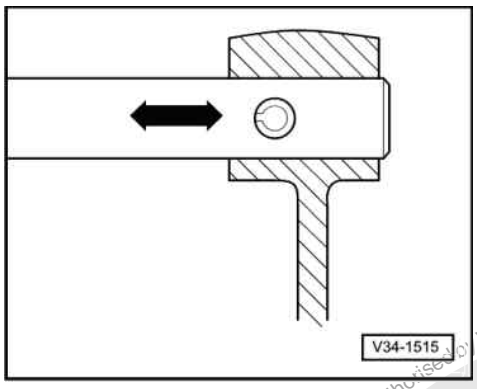


**Locking devices**

- Renew circlips.
- Do not overstretch circlips.
- Circlips must locate properly in the groove.
- -> Renew spring pins
  Installation position: Slot longitudinal to line of force.

**Bolts and nuts**

- Tighten and loosen bolts and nuts for securing covers and housings in a diagonal sequence.
- Especially delicate parts, such as clutch pressure plates, must not be distorted. Loosen and tighten bolts and nuts in stages in a diagonal sequence.
- Tightening torques as specified are for unoiled bolts and nuts.
- Renew self-locking bolts and nuts.

**Bearings**

- Install needle bearings with lettered side (thicker metal) towards fitting tool.
- Taper roller bearings fitted to one shaft must be renewed as a set. Use same make of bearings if possible!
- Heat inner taper roller bearing races to approx. 100 °C before pressing on.
- Do not interchange outer or inner races of bearings of the same size. The bearings are matched in pairs.

**Shims**

- Measure shims at several points with a micrometer. Tolerance variations make it possible to find the exact shim thickness required.
- Check for burrs and damage.
- Only install perfect shims.

**Synchronizer rings**

- Do not interchange. When reusing always fit to the same gear.
- Check for wear and renew if necessary.
- Coat with gear oil before installing.

**Selector gears**

- Before installing clean and heat on a hot plate to approx. 100 °C.
- Temperature can be checked with temperature tester V.A.G 1558.

Protected by copyright. Copying for private or commercial purposes, in part or in whole, is not permitted unless authorised by Volkswagen AG. Volkswagen AG does not guarantee or accept any liability with respect to the correctness of information in this document. Copyright by Volkswagen AG.
satelettronica

# 30 - Clutch

## 1 - Servicing clutch control

### 1.1 - Servicing clutch control

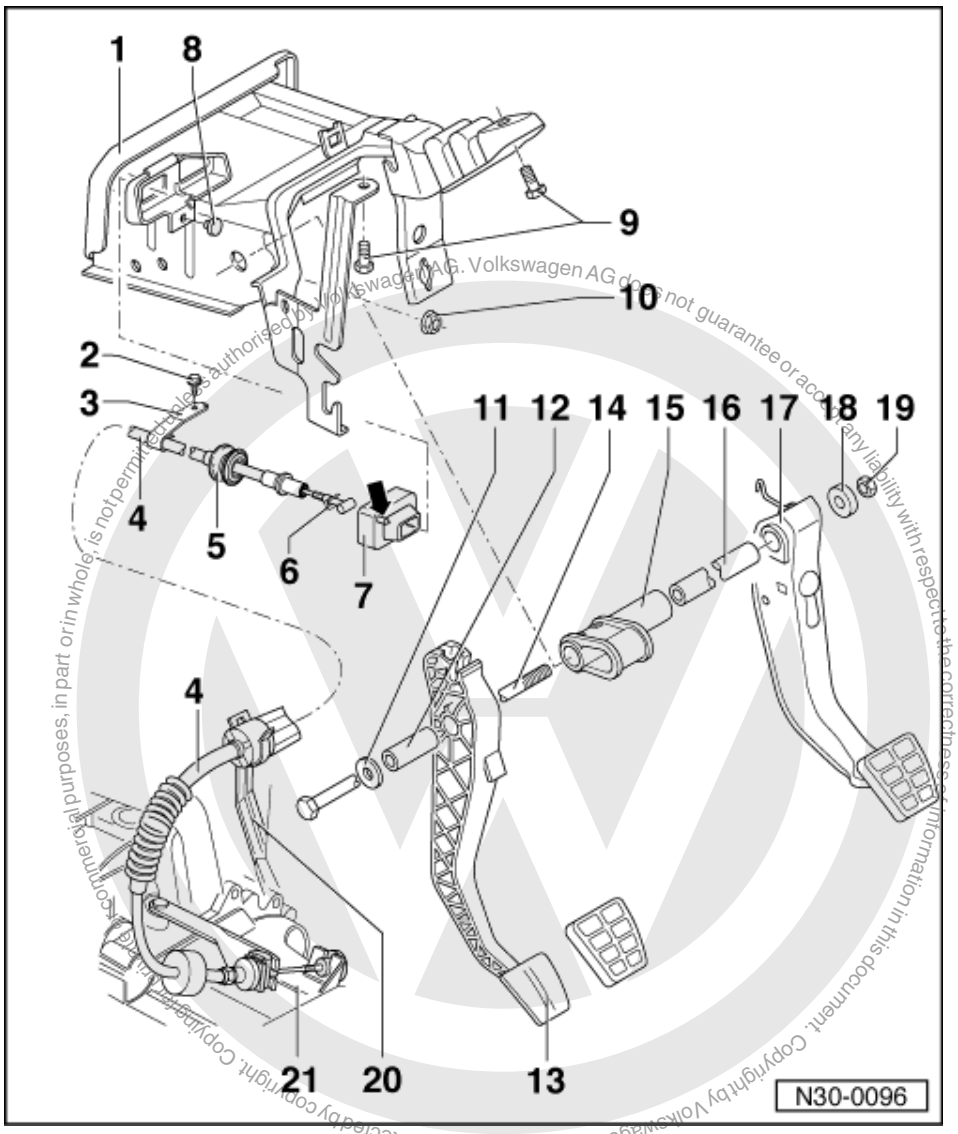


1 Mounting bracket
- Remove steering column before removing

=> Repair group 48; removing and installing steering column and column tube. removing and installing steering column and column tube.

2 Hexagon bolt, 2 Nm
- For retainer on body

3 Bracket

4 Clutch cable
- Checking function =>Page 25
- Modification
  from 27.04.95 new automatic adjustment =>Page 30
- Up to 26.04.95 removing and installing=>Page 27

satelettronica

- From 27.04.95 removing and installing => Page 31

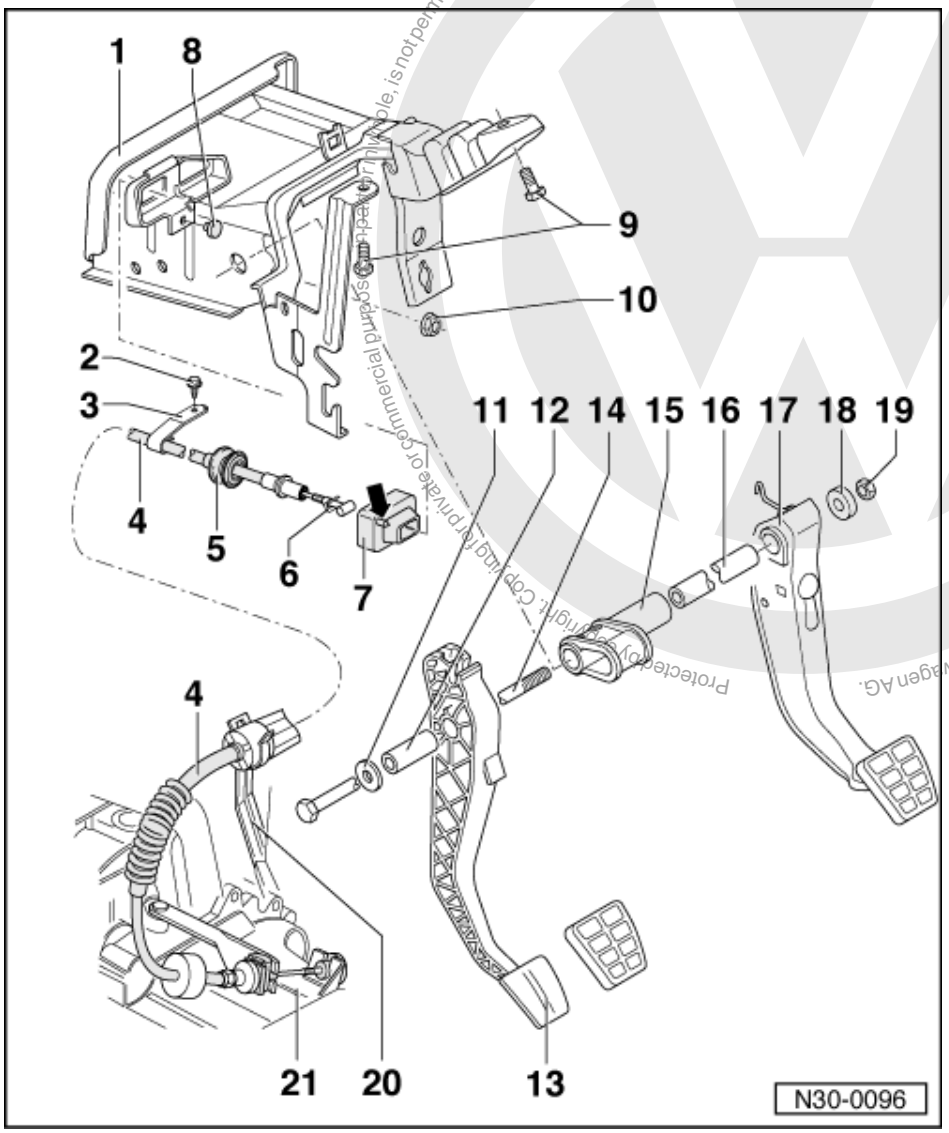


5 Bellows
- Clip into bulkhead

6 Mounting plate
- For clutch cable in clutch pedal

7 Support
- Install so that the rubber guide (arrow) is located in the mounting hole

8 Rubber buffer
- Clip into mounting bracket

9 Hexagon bolt, 25 Nm

10 Self-locking hexagon nut, 25 Nm
- Qty. 5
- For mounting bracket to stud/brake servo

Protected by copyright. Copying for private or commercial purposes, in whole or in part, is not permitted unless authorised by Volkswagen AG. Volkswagen AG does not guarantee or accept any liability with respect to the correctness of information in this document. Copyright by Volkswagen AG.
satelettronica

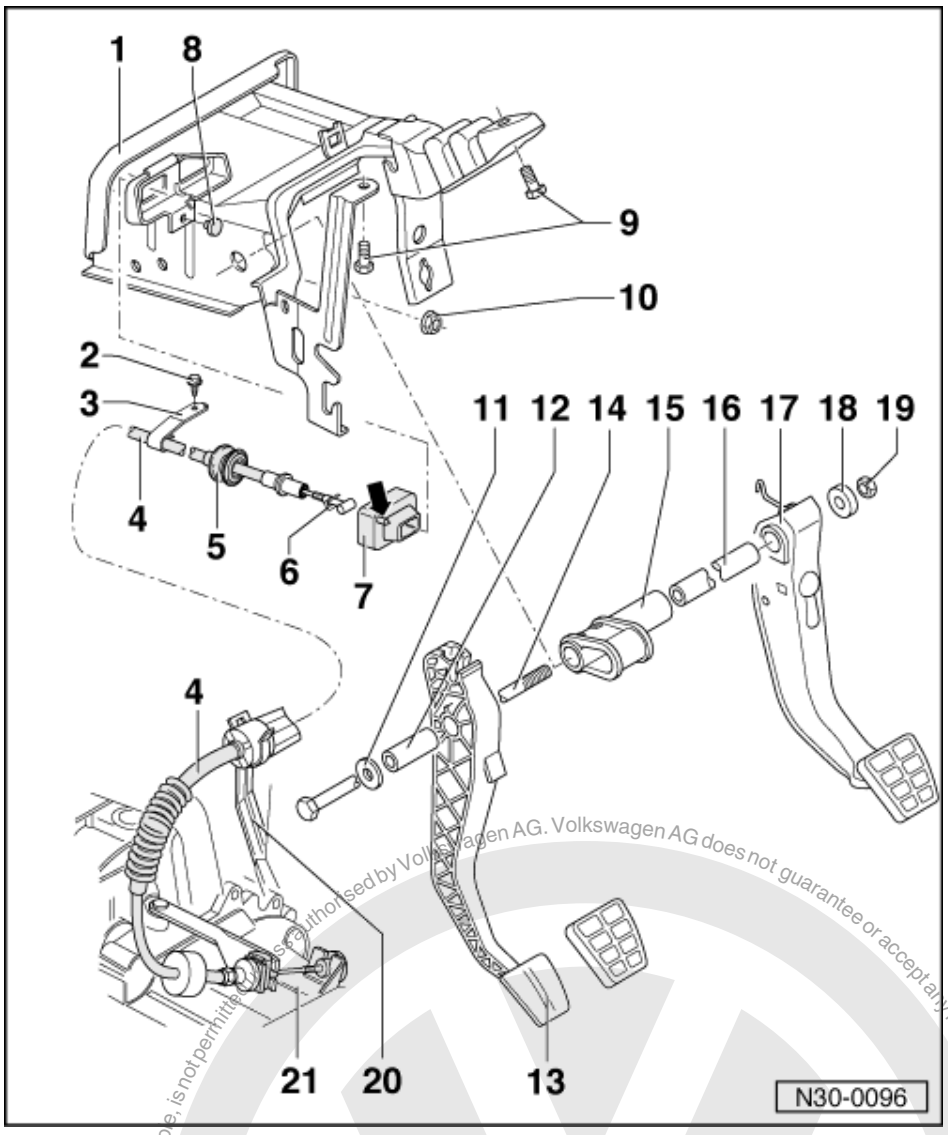


11 Washer

12 Mounting bush
- For clutch pedal
- Lubricate with MoS2 grease.

13 Clutch pedal
- Removing and installing =>Page 37

14 Brake and clutch pedals pivot pin

15 Mounting bush
- For mounting the steering column

16 Mounting bush
- Push into mounting bush (Item 15 )

17 Brake pedal

Protected by copyright. Copying for private and commercial purposes, in whole or in part, is not permitted unless authorised by Volkswagen AG. Volkswagen AG does not guarantee or accept any liability with respect to the correctness of information in this document. Copyright by Volkswagen AG.
satelettronica

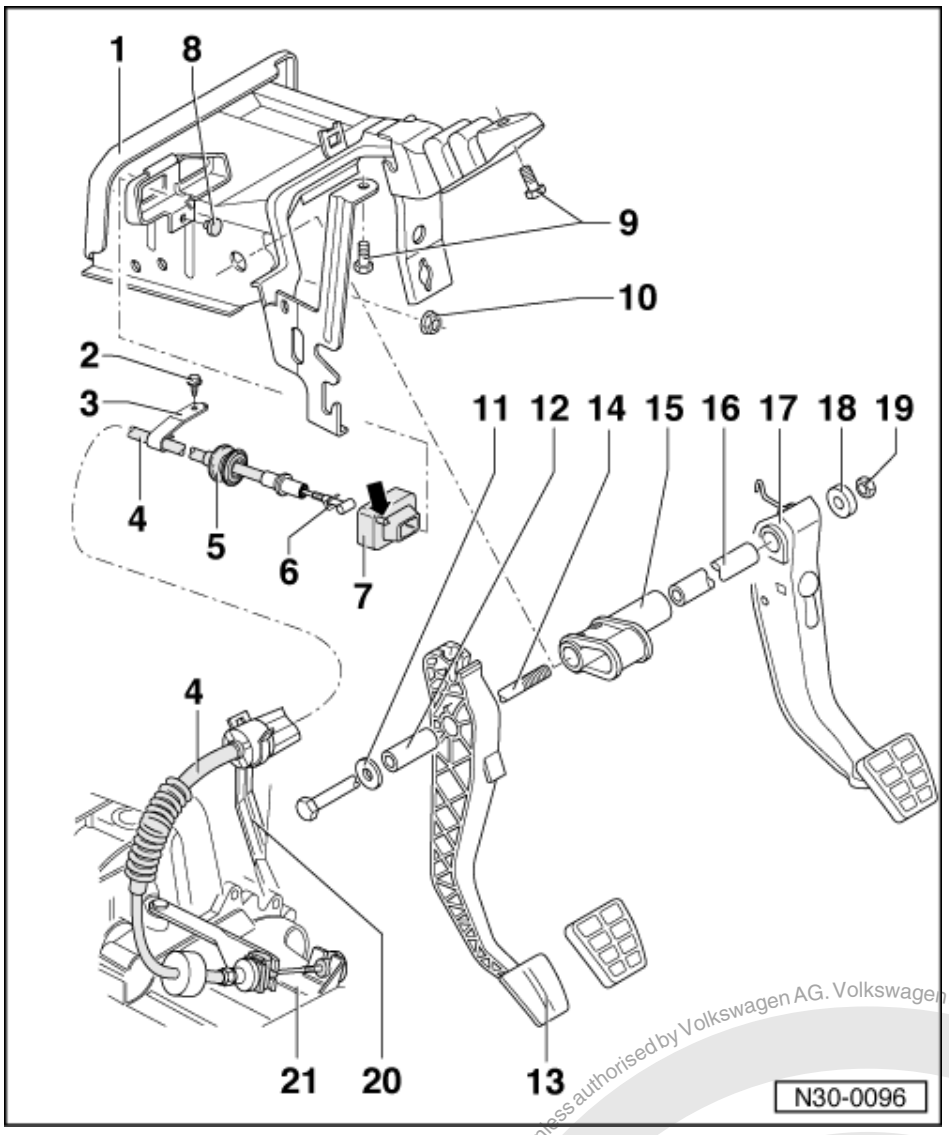


18 Washer
19 Hexagon nut, 25 Nm
20 Retainer
- Secured together with the battery console
- Modification
  from 27.04.95 wire retainer =>Page 30

21 Gearbox

## 1.2 - Checking clutch cable function

- The clutch cable adjusting mechanism must be undamaged.

satelettronica
Protected by copyright. Copying for private or commercial purposes, in part or in whole, is not permitted unless authorised by Volkswagen AG. Volkswagen AG does not guarantee or accept any liability with respect to the correctness of information in this document. Copyright by Volkswagen AG.

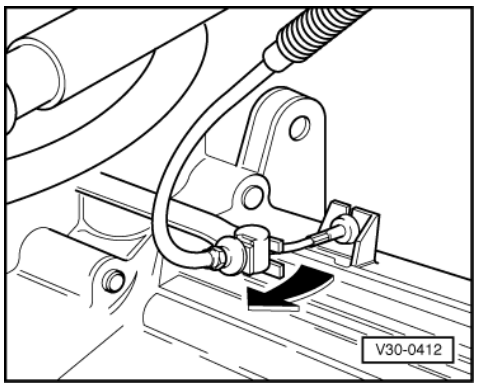


- Depress clutch pedal fully onto stop at least 5 times.
- -> Move release lever approx. 10 mm, opposite to operating direction (arrow). The release lever must move freely.

***Notes:***

*To prevent an early and therefore unjustified replacement of the clutch cable, observe the following during the functional check:*

- Before repeating the functional check always pump the clutch pedal at least 5 times.
- Only when the release lever cannot be moved opposite to the operating direction does the clutch cable adjustment mechanism require servicing.

**Making clutch cable adjusting mechanism serviceable again (up to 26.04.95) =>Page 26 .**

**Making clutch cable adjusting mechanism serviceable again (from 27.04.95) =>Page 31 .**

**Making clutch cable adjusting mechanism serviceable again (up to 26.04.95)**

If the adjusting mechanism functional check cannot be carried out as described on Page 25 then it is possible that the mechanism has been rendered unserviceable by mis-handling (e.g. hooked into release lever under tension).

Identification:
The clutch release lever cannot be moved opposite to the direction of operation, even after operating clutch pedal several times.

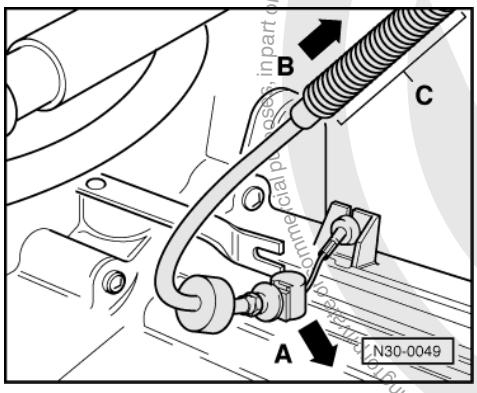


The non-functioning adjusting mechanism will lead to clutch slip and therefore premature clutch wear.

- -> Pull clutch cable out of release lever mounting by pulling forcefully (arrow direction -A-).
- Depress clutch pedal down to floor plate.
- Push sleeve towards bulkhead (arrow direction -B-) until the adjusting mechanism in the area of bellows -C- can be pressed together.
- Insert clutch cable into release lever mounting.

satelettronica

- Carry out functional check again.

## 1.3 - Removing and installing clutch cable (up to 26.04.95)

- If clutch is a cause of complaint, then check function of clutch cable before removal => Page 25 .

### Removing

- Disconnect earth strap from battery

*Note:*

*Note radio coding for vehicles with coded radio.*

- Depress clutch pedal several times down onto stop.

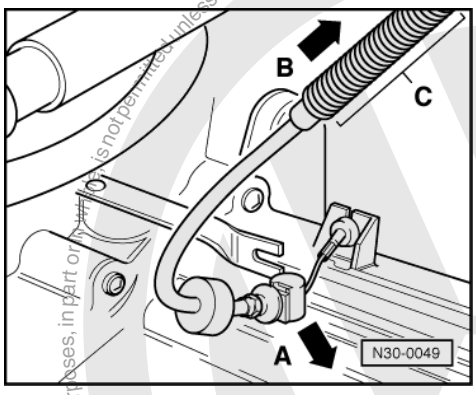


- -> Pull clutch cable out of release lever mounting (arrow -A-) to do this pull cable sleeve towards normal vehicle direction of travel.

The adjusting mechanism is then pushed towards the bulkhead (arrow -B-) so that it is pushed together within the area of bellows -C-.

- Unhook clutch cable from mounting on gearbox.

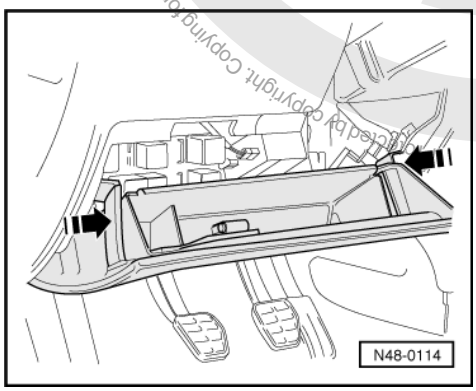


- -> Pull stowage compartment, below dash panel, out of mountings but first push stops in direction of arrow.

Copyright by Volkswagen AG. Volkswagen AG does not guarantee or accept any liability with respect to the correctness of information in this document. Copyright by Volkswagen AG. Copying or printing is not permitted unless authorised by Volkswagen AG. Copying for private or commercial purposes, in part or in whole, is not permitted unless authorised by Volkswagen AG.
satelettronica

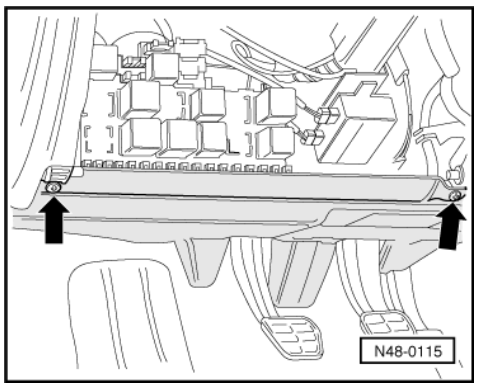


- -> Unbolt cover (arrows)
- Remove relay plate from mounting;

*Note:*

*Do not pull connectors off relays and wiring.*

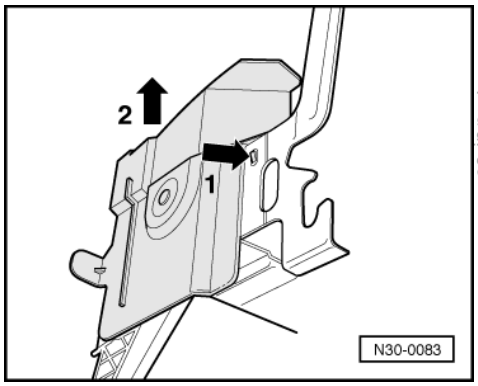


- -> Remove cover for clutch pedal from mounting bracket (arrows -1- and -2-).

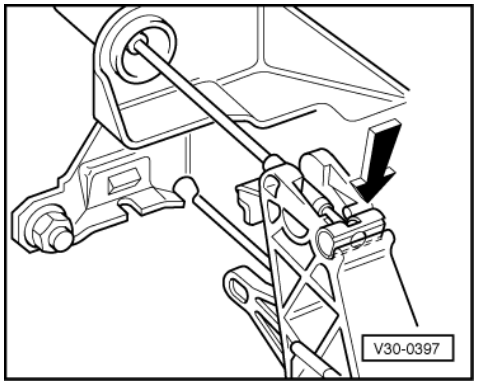


- -> Unhook clutch cable from clutch pedal (arrow).

Protected by copyright. Copying for private or commercial purposes, in part or in whole, is not permitted unless authorised by Volkswagen AG. Volkswagen AG does not guarantee or accept any liability with respect to the correctness of information in this document. Copyright by Volkswagen AG.
satelettronica

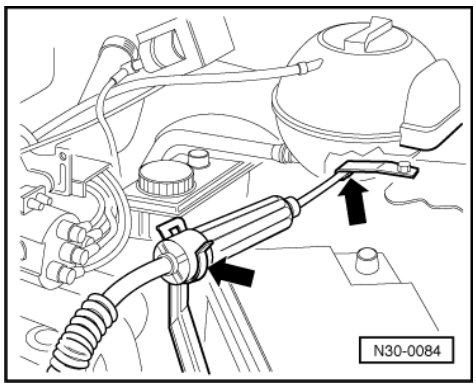


- -> Remove clutch cable from retainers (arrows).

Installing

- Lubricate clutch cable clutch pedal mounting point with MoS2 grease.
- Push clutch cable through bulkhead and clip bellows in position.
- Clip clutch cable into retainers (arrows).

*Note:*

*Do not kink clutch cable when doing this. The function of the adjusting mechanism cannot otherwise be guaranteed.*

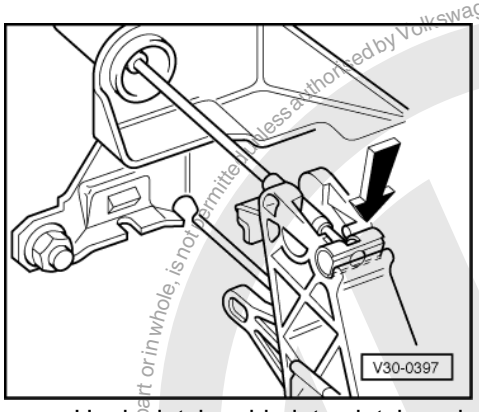


- -> Hook clutch cable into clutch pedal (arrow)

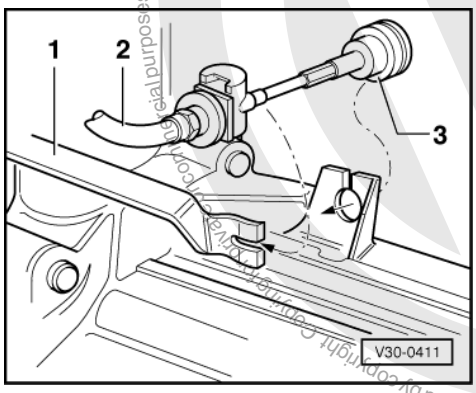


-> Hook clutch cable onto gearbox as follows:

- Fit rubber buffer -3-.
- Pull cable sleeve -2- in normal direction of travel and insert buffer in clutch release lever -1-

satelettronica
Protected by copyright. Copyright by Volkswagen AG. Volkswagen AG does not guarantee or accept any liability with respect to the correctness of information in this document. Copyright by Volkswagen AG.
Reproduction, in part or in whole, is not permitted unless authorised by Volkswagen AG. Volkswagen AG does not guarantee or accept any liability with respect to the correctness of information in this document. Copyright by Volkswagen AG.

*Notes:*

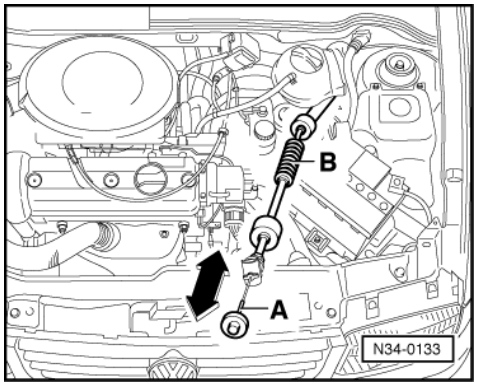


- -> If the cable sleeve cannot be moved in normal direction of travel then move the inner flexible cable -A- several times back and forth until the sleeve in the area of bellows -B- can be pushed together.
- The cable is then hooked in as shown on illustration V30-0411.
- If sliding the sleeves together is still not possible then the clutch cable adjusting mechanism must be made serviceable again =>Page 25

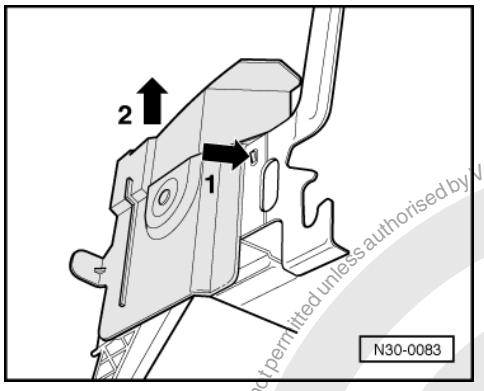


- -> Locate cover on mounting bracket (arrows -1- and -2-).
- Insert relay plate into mounting; check wiring and relay connectors and press fully home if necessary.
- Install cover and stowage compartment below dash panel.
- Check clutch cable function =>Page 25

## 1.4 - Modifications to clutch cable (from 27.04.95)

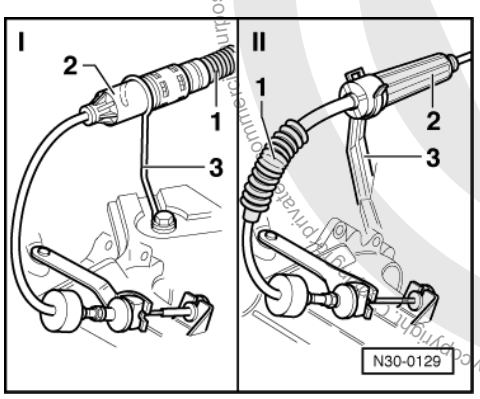


-> I = New:

The protective boot -1- for the automatic adjustment is now located behind the adjusting device -2-. The clutch cable is supported with a wire retainer -3-.

Protected by copyright. Copying for private or commercial purposes, in part or in whole, is not permitted unless authorised by Volkswagen AG. Volkswagen AG does not guarantee or accept any liability with respect to the correctness of information in this document. Copyright by Volkswagen AG.
satelettronica

II = Previously:

The protective boot -1- for the automatic adjustment is located in front of the adjustment device -2-. The clutch cable is supported in a sheet metal retainer -3-.

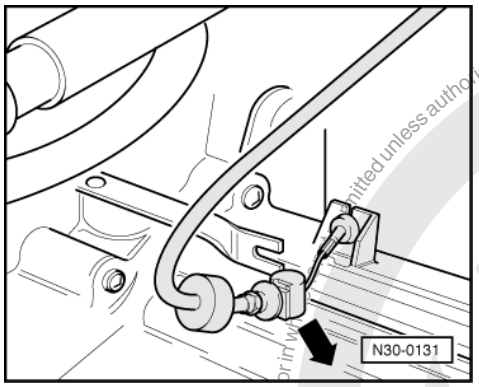


**Making clutch cable adjusting mechanism serviceable again (from 27.04.95).**

- A functional check of the new clutch cable is to be carried out as previously described on page 25 .
- -> Pull clutch cable out of fork in release lever by pulling forcefully (direction of arrow).
- Pull rubber buffer out of support bracket on gearbox.

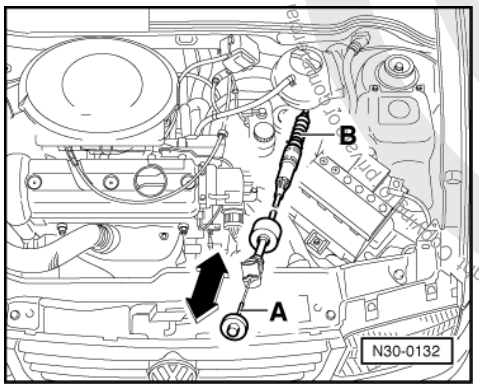


- -> Move braiding -A- of cable to and fro several times, until the adjusting mechanism -B- can be pressed together.
- Tension clutch cable with retaining strap =>from page 33 .
- Press rubber buffer into support bracket on gearbox.
- Connect clutch cable to release lever.
- After installing clutch pedal remove retaining strap.
- Carry out functional check again.

## 1.5 - Removing and installing clutch cable (from 27.04.95)

**Removing**

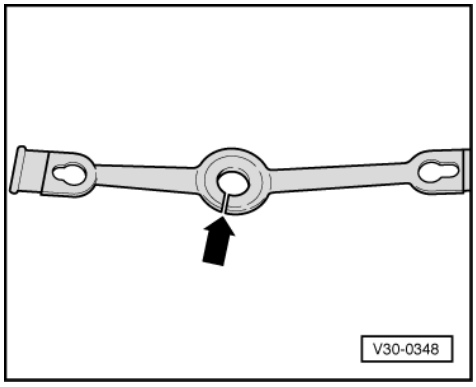


Protected by copyright. Copyright by Volkswagen AG. Volkswagen AG does not guarantee or accept any liability with respect to the correctness of information in this document. Copying or distribution to third parties is not permitted unless authorised by Volkswagen AG.
satelettronica

- If clutch is a cause of complaint, then check function of clutch cable before removal => Page 25 .
- If no retaining strap is present then the adjusting mechanism must be tensioned with the retaining strap illustrated to enable it to be removed and installed. It is enclosed with new cables to tension the adjusting mechanism.
- -> The ring (arrow) on retaining strap must be cut open.

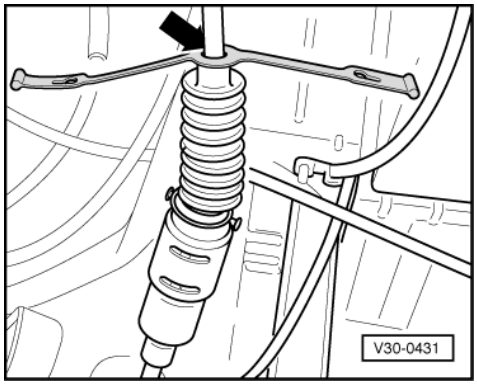


- -> Locate retaining strap ring above the protective sleeve (arrow).

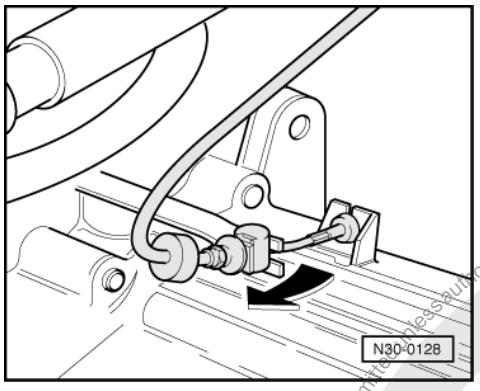


- Depress clutch pedal fully onto stop at least 5 times.
- -> Move release lever approx. 10 mm, opposite to operating direction (arrow). The release lever must move freely.

The adjusting mechanism will be compressed.

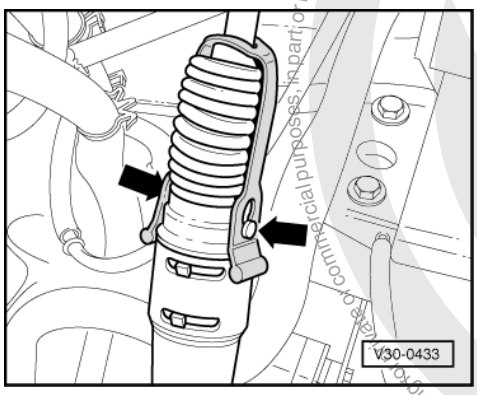


- -> Hook retaining strap tabs onto adjustment mechanism pins (arrows) (2nd mechanic) required.
- Unhook clutch cable at gearbox operating lever.
- Pull rubber buffer out of support on gearbox.

Protected by copyright. Copying for private or commercial purposes, in part or in whole, is not permitted unless authorised by Volkswagen AG. Volkswagen AG does not guarantee or accept any liability with respect to the correctness of information in this document. Copyright by Volkswagen AG.
satelettronica

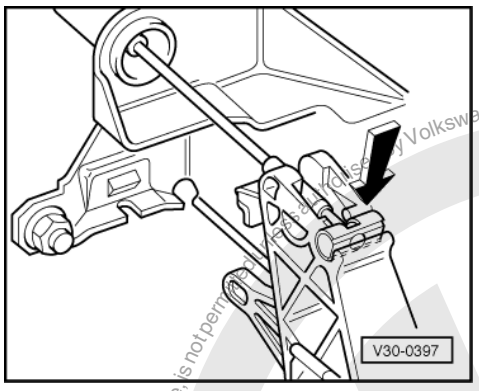


- -> Unhook clutch cable on clutch pedal (arrow) =>from page 37 .

Installing

(Clutch cable under tension)

- Lubricate clutch cable attachment point at clutch pedal with MoS2 grease.
- Push clutch cable through bulkhead and clip bellows in position.

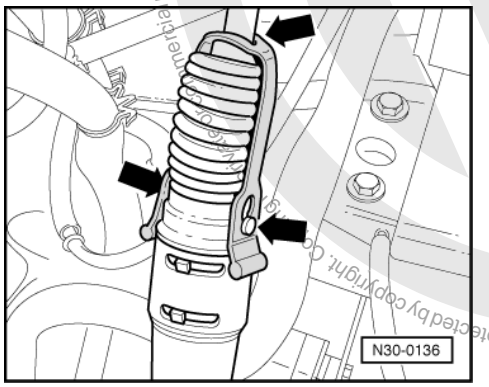


- Attach clutch cable to clutch pedal.
- Press rubber buffer into support on gearbox.
- Attach clutch cable to release lever.
- Attach clutch cable into support bracket.
- -> After installing clutch pedal remove retaining strap (arrows).
- Check function of clutch cable =>Page 25 .

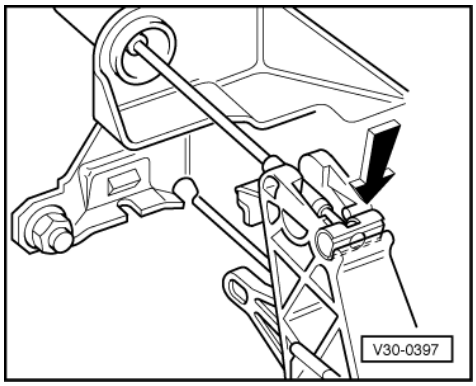


Installing

(Clutch cable not under tension)

- Lubricate clutch cable clutch pedal mounting point with MoS2 grease.
- Push clutch cable through bulkhead.

Protected by copyright. Copyright by Volkswagen AG. Volkswagen AG does not guarantee or accept any liability with respect to the correctness of information in this document. Copyright by Volkswagen AG.
satelettronica

- -> Attach clutch cable to clutch pedal (arrow).

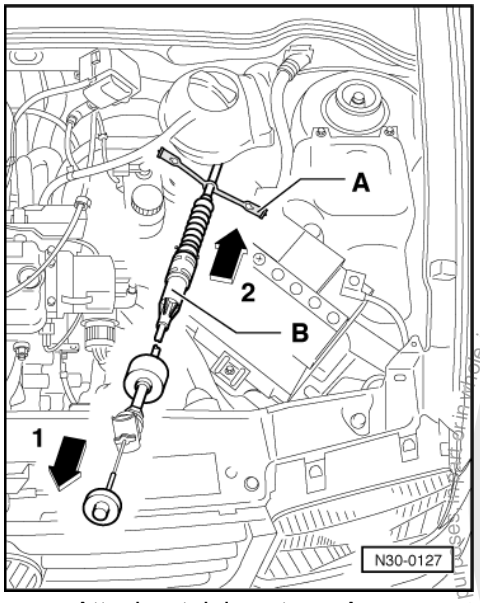


- -> Attach retaining strap -A-
- Pull end piece of cable in direction of arrow -1- and hold in this position, at the same time move the cable sleeve with the adjusting mechanism -B- to and fro several times, until it can be pressed together in direction of bulkhead (direction of arrow -2-).

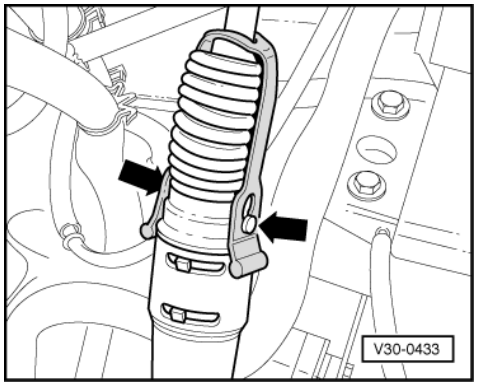


- -> Hook retaining strap tabs onto adjustment mechanism pins (arrows) (2nd mechanic) required.
- Fit bellows into bulkhead.

- Press rubber buffer into support on gearbox.

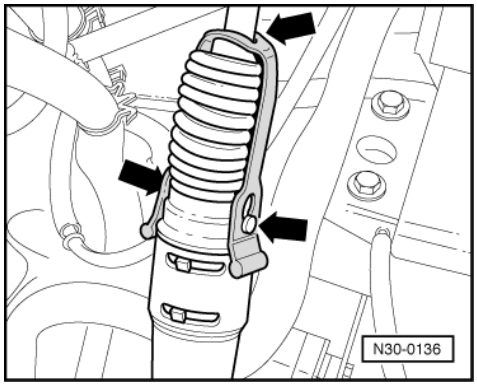


- Attach clutch cable to release lever.
- Attach clutch cable in support bracket.
- -> After installing clutch pedal remove retaining strap (arrows).

Protected by copyright. Copying for private or commercial purposes, in whole or in part, is not permitted unless authorised by Volkswagen AG. Volkswagen AG does not guarantee or accept any liability with respect to the correctness of information in this document. Copyright by Volkswagen AG.
satelettronica

- Check function of clutch cable =>Page 25 .

*Notes:*

- The new clutch cable can also be installed in older vehicles.

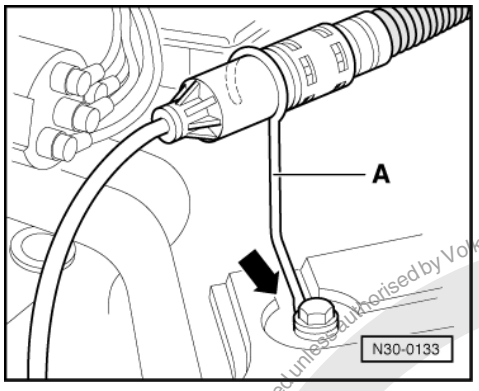


- The wire retainer for the new clutch cable must then also be fitted. It is secured to the battery console.
- -> The battery console must be matched to the wire retainer -A-.
- This means a 10 mm wide groove (arrow) 5 mm deep must be made.

## 1.6 - Clutch cable on RHD vehicles (from 27 04. 95)

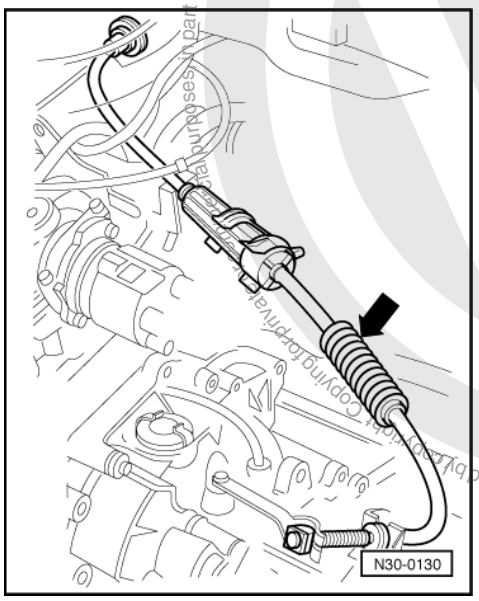


-> From 27.04.95 the automatic adjustment (arrow) has been discontinued.

- The clutch cable can once again be adjusted => Page 36 .

Protected by copyright. Copying for private or commercial purposes, in part or in whole, is not permitted unless authorised by Volkswagen AG. Volkswagen AG does not guarantee or accept any liability with respect to the correctness of information in this document. Copyright by Volkswagen AG.
satelettronica

### Removing

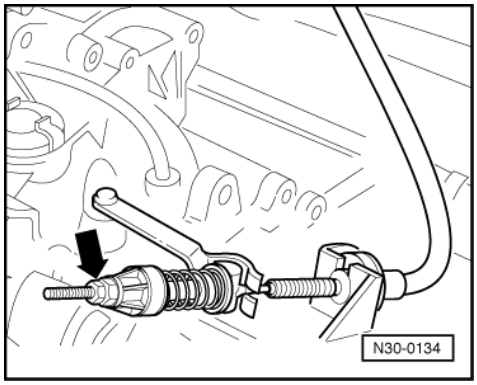


- -> Loosen lock nut and adjusting nut (arrow).
- Unhook clutch cable at gearbox operating lever.
- Pull rubber buffer out of support on gearbox.
- Unhook clutch cable from clutch pedal =>from page 37 .
- Pull clutch cable out of retainer on bulkhead and remove.

### Installing

- Lubricate clutch cable attachment point at clutch pedal with MoS2 grease.

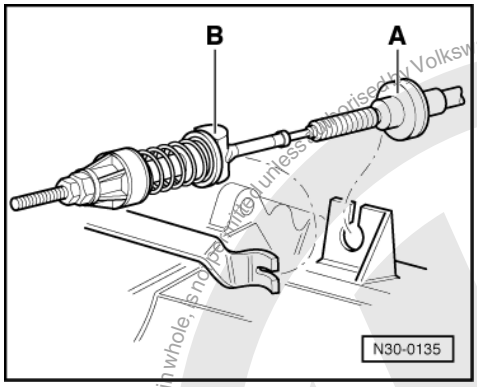


- Push clutch cable through bulkhead and clip bellows in position.
- Attach clutch cable to clutch pedal.
- -> Press rubber buffer -A- into support.
- Attach clutch cable -B- to release lever.
- Push clutch cable into retainer on bulkhead.

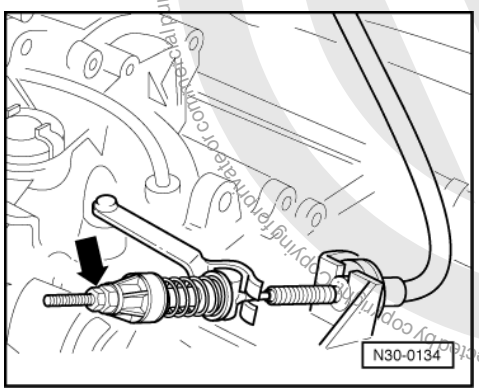


### Adjusting clutch cable

- -> Loosen lock nut and adjusting nut (arrow).
- Adjust clutch via adjusting nut so that there is free play of 15 ... 20 mm at clutch pedal.

Protected by copyright. Copyright by Volkswagen AG. Volkswagen AG does not guarantee or accept any liability with respect to the correctness of information in this document. Copyright by Volkswagen AG.
satelettronica

- Secure adjusting nut with lock nut.

*Note:*

*The new clutch cable can also be installed in older vehicles.*

## 1.7 - Removing and installing clutch pedal

### Removing

- Disconnect earth strap from battery

*Note:*

*Note radio coding for vehicles with coded radio.*

- Tension clutch cable and remove from gearbox.

Up to 26.04.95 =>Page 27

From 27.04.95 =>Page 31

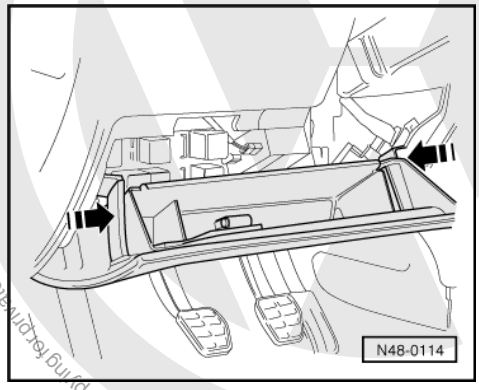


- -> Pull stowage compartment, below dash panel, out of mountings but first push stops in direction of arrow.

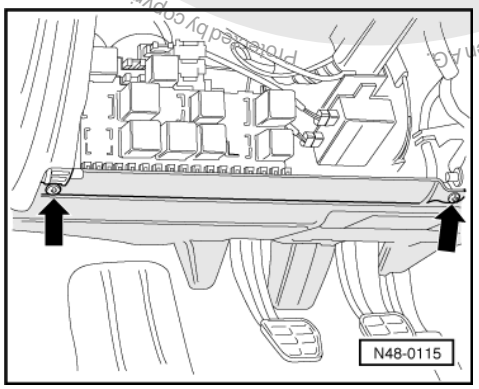


- -> Unbolt cover (arrows)
- Remove relay plate from mounting;

*Note:*

*Do not pull connectors off relays and wiring.*

Protected by copyright. Copyright by Volkswagen AG. Volkswagen AG does not guarantee or accept any liability with respect to the correctness of information in this document. Copyright by Volkswagen AG. Reproduction for commercial purposes, in part or in whole, is not permitted unless authorised by Volkswagen AG.
satelettronica

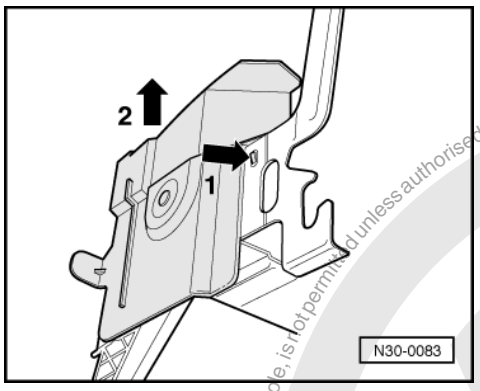


- -> Remove cover for clutch pedal from mounting bracket (arrows -1- and -2-).

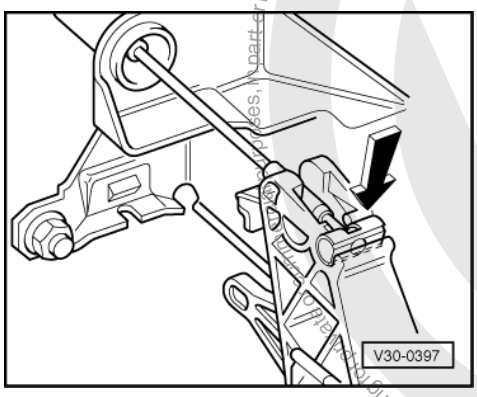


- -> Unhook clutch cable from clutch pedal (arrow).

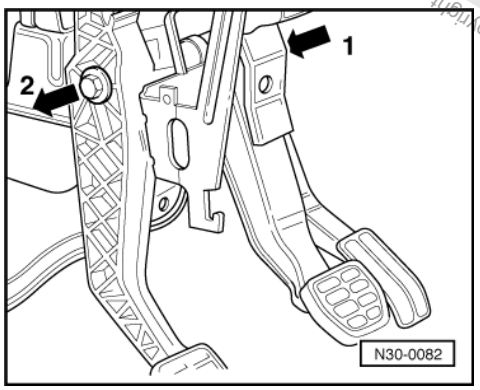


- -> Unbolt hexagon nut (arrow 1) for clutch pedal and brake pedal pivot pin and remove complete with washer.
- Pull pivot pin out carefully (arrow 2).

*Note:*

*Do not move brake pedal. After pulling out pivot pin it is no longer secured.*

- Take out clutch pedal.

**Installing**

- Lubricate all bearings and contact surfaces with MoS2 grease.

Protected by copyright. Copying for private or commercial purposes, in part or in whole, is not permitted unless authorised by Volkswagen AG. Volkswagen AG does not guarantee or accept any liability with respect to the correctness of information in this document. Copyright by Volkswagen AG.
satelettronica

Copyright by Volkswagen AG. Volkswagen AG does not guarantee or accept any liability with respect to the correctness of information in this document. Copying for private or commercial purposes, in part or in whole, is not permitted unless authorised by Volkswagen AG.

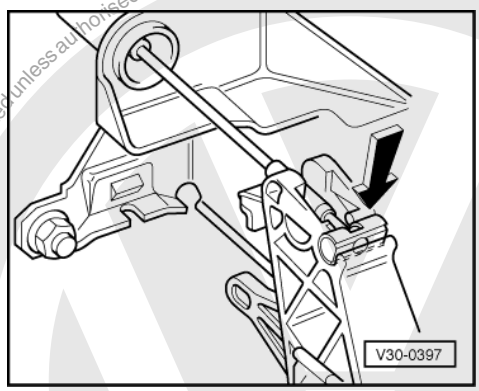


- Fit clutch pedal with washer onto pivot pin.
- Push pivot pin for clutch pedal and brake pedal in onto stop; when doing this move brake pedal slightly if necessary.
- Fit washer and nut and tighten.
- -> Hook clutch cable into clutch pedal (arrow).
- Install clutch cable to gearbox.

Up to 26.04.95 =>from Page 29

From 27.04.95 =>from Page 33

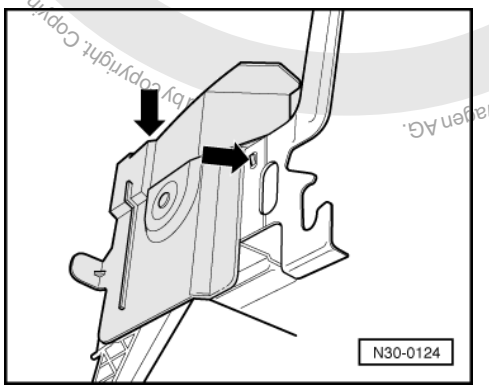


- -> Engage cover in mounting bracket (arrows).
- Insert relay plate into mounting; check wiring and relay connectors and press fully home if necessary.
- Install cover and stowage compartment below dash panel.
- Check clutch cable function =>Page 25

**Tightening torques**

| | |
|---|---|
| Hexagon nut on pivot pin for clutch and brake pedal | 25 Nm |

satelettronica

# 2 - Servicing clutch release mechanism

## 2.1 - Servicing clutch release mechanism

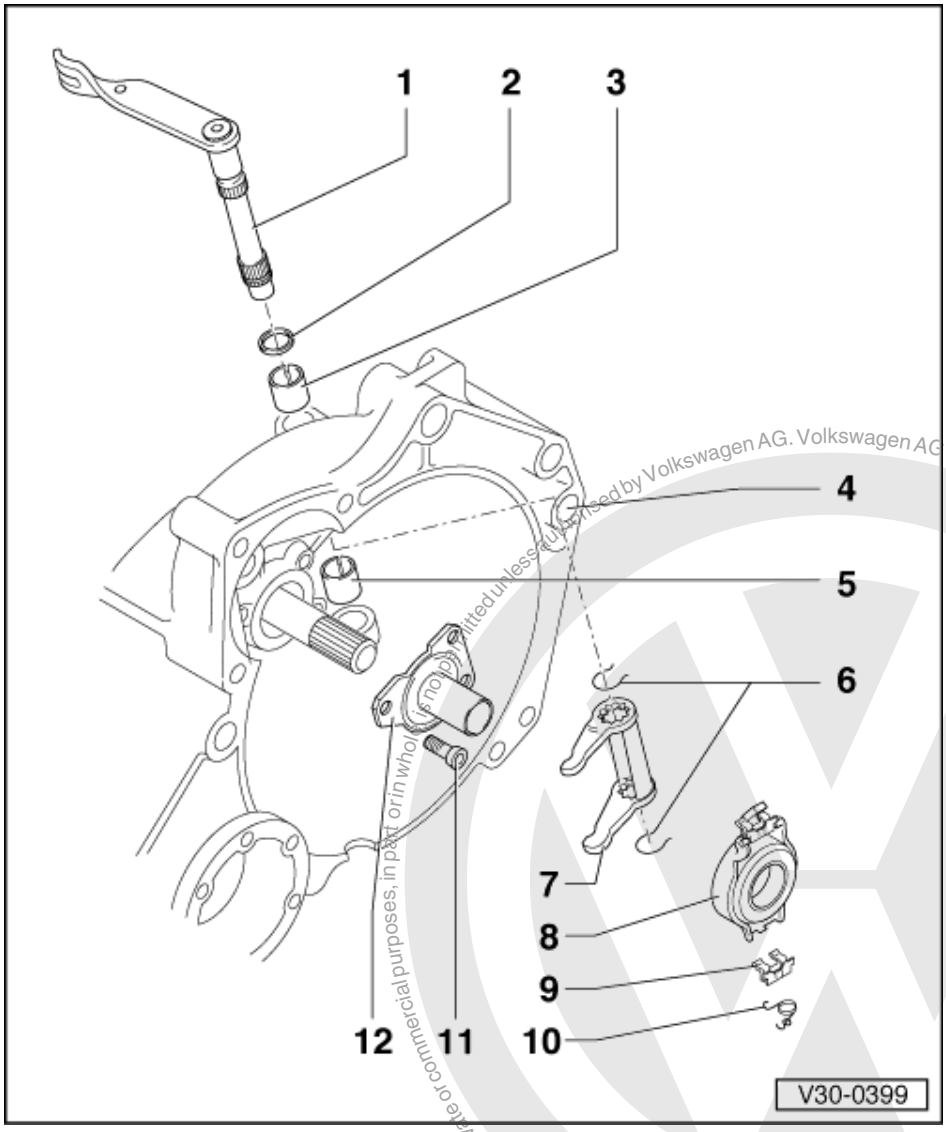


*Notes:*

- Remove gearbox to work on release shaft and on release bearing => Page 87
- Lubricate all bearings and contact surfaces with constant velocity grease Part No.: G000 603.

1 Release shaft
- Check for ease of movement

2 Seal
- Lever out with screwdriver
- Installing => Fig. 5

3 Mounting bush
- Removing => Fig. 1
- Installing => Fig. 4

4 Clutch housing
- Servicing => page 125

Protected by copyright. Copying for private or commercial purposes, in part or in whole, is not permitted unless authorised by Volkswagen AG. Volkswagen AG does not guarantee or accept any liability with respect to the correctness of information in this document. Copyright by Volkswagen AG.
satelettronica

Volkswagen AG. Volkswagen AG does not guarantee or accept any liability with respect to the correctness of information in this document. Copyright by Volkswagen AG. Protected by copyright. Copying for private or commercial purposes, in part or in whole, is not permitted unless authorised by Volkswagen AG.

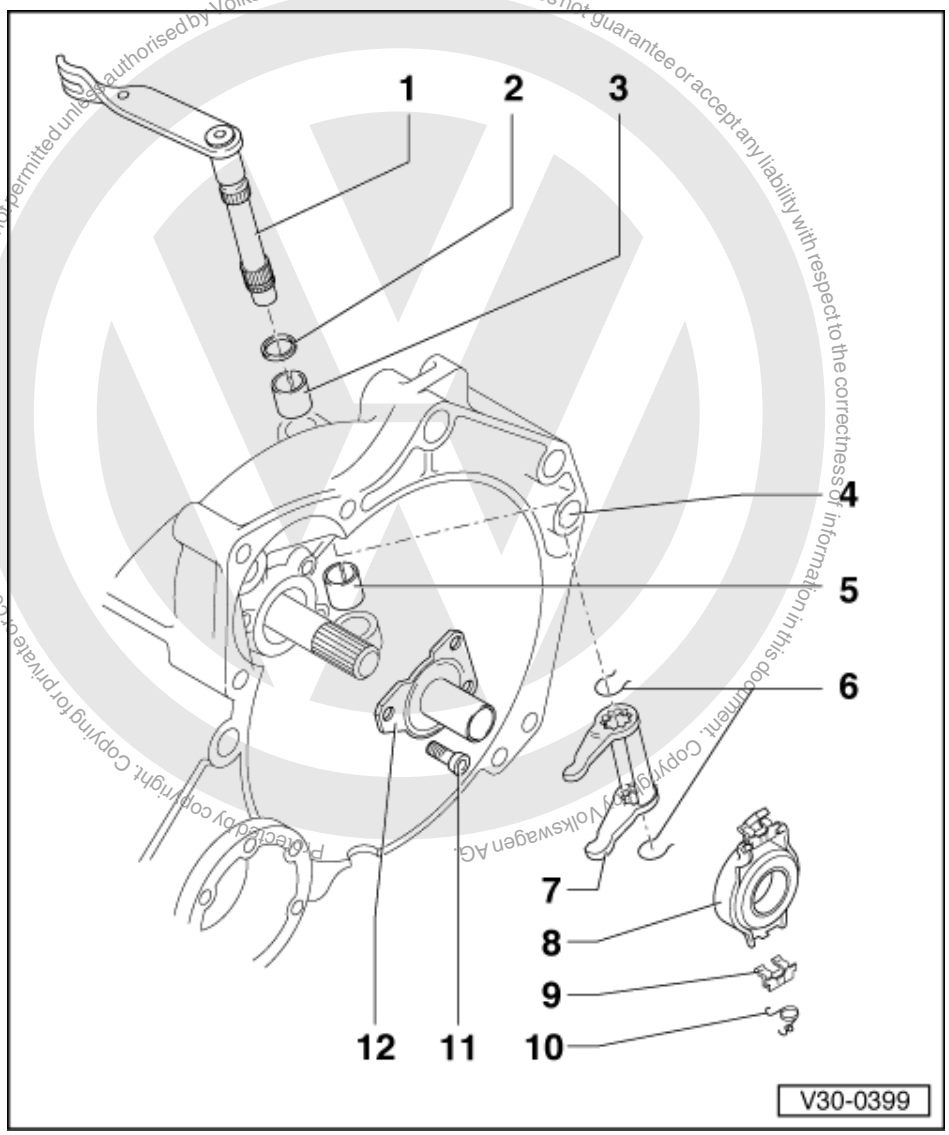


5 Mounting bush
- Removing => Fig. 2
- Installing => Fig. 3

6 Securing clip
- Lever out before removing release shaft

7 Release lever
- Install together with release shaft => Fig. 6

8 Release bearing
- Do not wash-out bearing, only wipe
- Renew noisy bearings

9 Retaining clip
- Insert onto release bearing

10 Retaining spring
- Insert into retaining clip and then insert into release fork

satelettronica

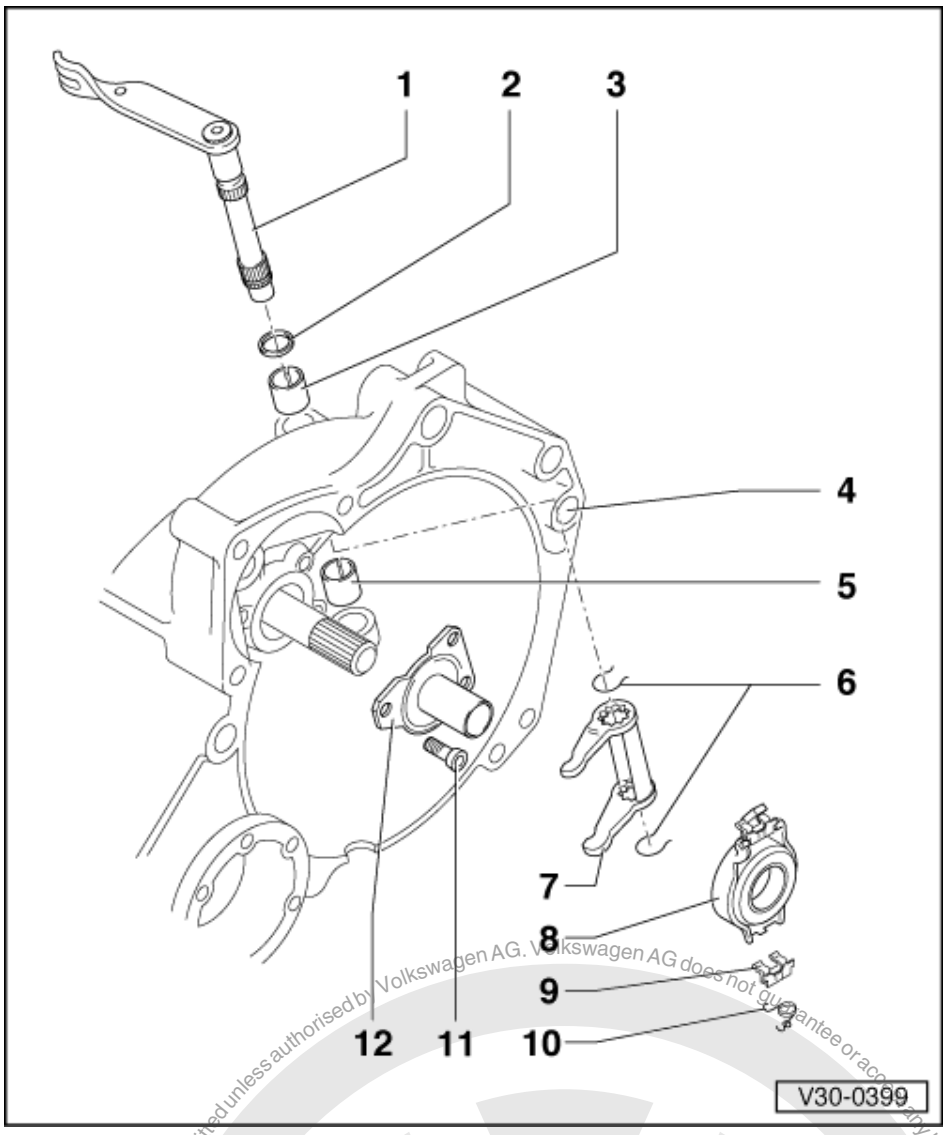


**11 Bolt, 18 Nm**

- Self-locking
- Always renew

**12 Guide sleeve**

- Grease release bearing guide

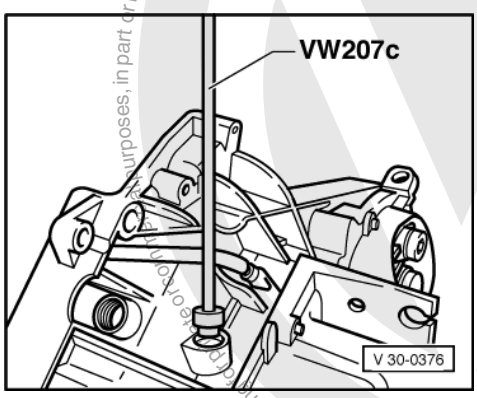


Protected by copyright. Copyright by Volkswagen AG.
Volkswagen AG does not guarantee or accept any liability with respect to the correctness of information in this document.
Copyright by Volkswagen AG. Volkswagen AG. Copyright. Copying for private or commercial purposes, in part or in whole is not permitted unless authorised by Volkswagen AG.
satelettronica

Protected by copyright. Copying for private or commercial purposes, in part or in whole, is not permitted unless authorised by Volkswagen AG. Volkswagen AG does not guarantee or accept any liability with respect to the correctness of information in this document. Copyright by Volkswagen AG.

-> Fig.1 Driving mounting bush out

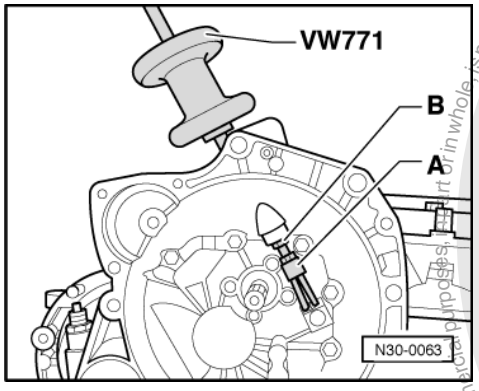


-> Fig.2 Pulling mounting bush out

A - Internal puller, e.g. Kukko 21/02, 10 ... 14 mm
B - VW 771/15 in conjunction with adapter from counter support Kukko 22/1

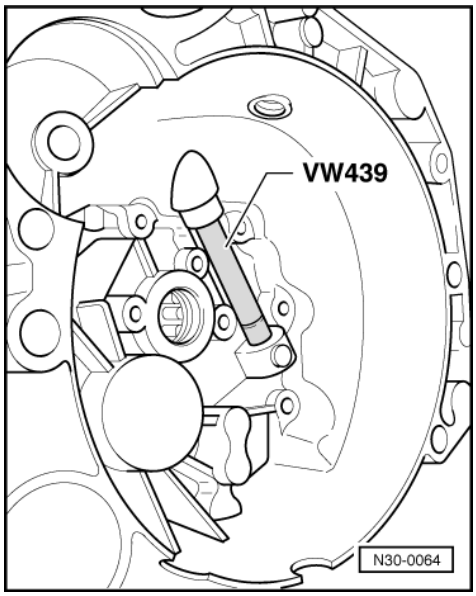


-> Fig.3 Driving mounting bush in onto stop

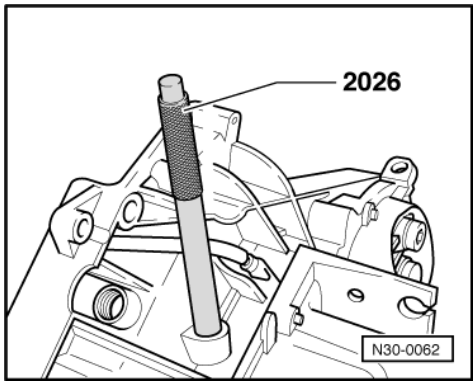


satelettronica

-> Fig.4 Driving mounting bush in flush

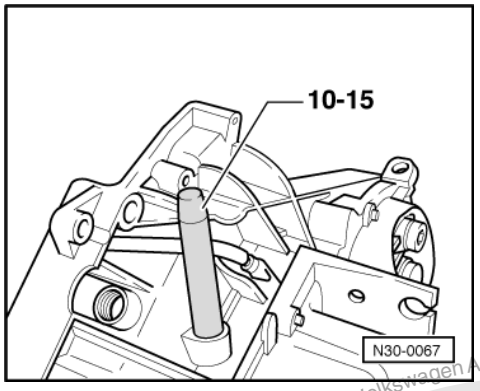


-> Fig.5 Pushing release shaft seal in onto stop

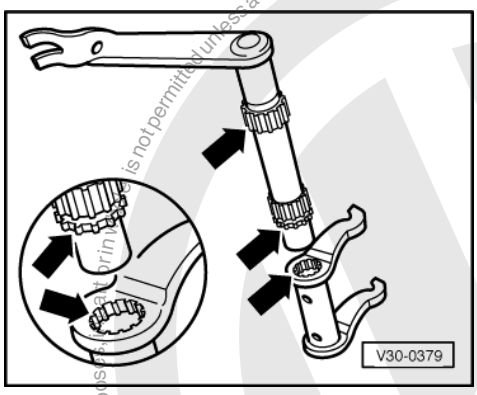


-> Fig.6 Assembling release lever to release shaft

- Insert release lever so that the groove in the spline aligns with the edge of the release lever (arrows).

Protected by copyright. Copying for private or commercial purposes, in part or in whole, is not permitted unless authorised by Volkswagen AG. Volkswagen AG does not guarantee or accept any liability with respect to the correctness of information in this document. Copyright by Volkswagen AG.
satelettronica

# 3 - Servicing clutch

## 3.1 - Servicing clutch

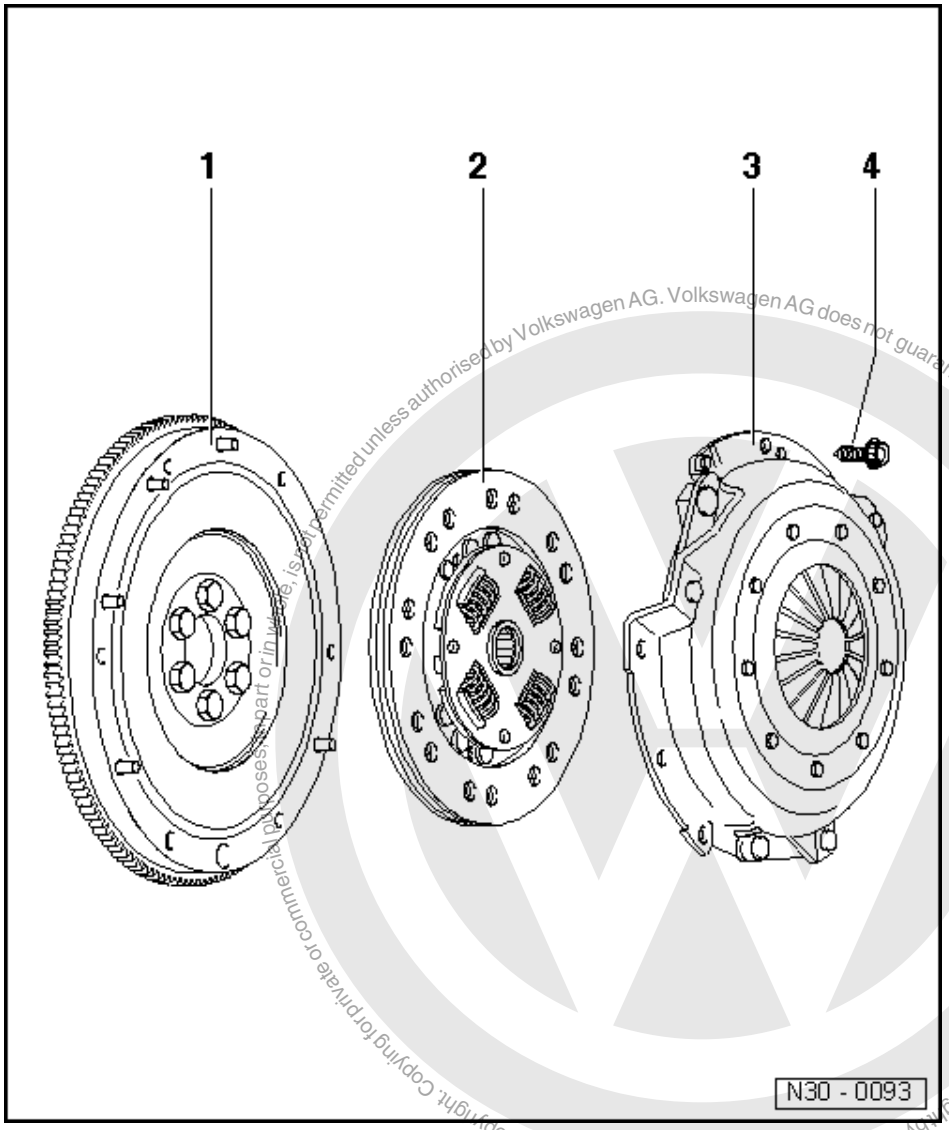


Protected by copyright. Copying for private or commercial purposes, in part or in whole, is not permitted unless authorised by Volkswagen AG. Volkswagen AG does not guarantee or accept any liability with respect to the correctness of information in this document. Copyright by Volkswagen AG.

satelettronica

(Gearbox removed)

**Modifications to clutch for Diesel engine vehicles =>Page 49**

***Notes:***

- Before replacing the clutch and pressure plate note fault finding transmission No.9 - Defects on the clutch and clutch mechanism
- Replace clutch plates and pressure plates with damaged or loose rivets
- Select correct clutch plate and pressure plate according to parts list and engine code.

1 **Flywheel**
  - Ensure centring pins are a tight fit
  - Contact surface for clutch lining must be free of grooves, oil and grease
  - Removing and installing

=> Repair group13

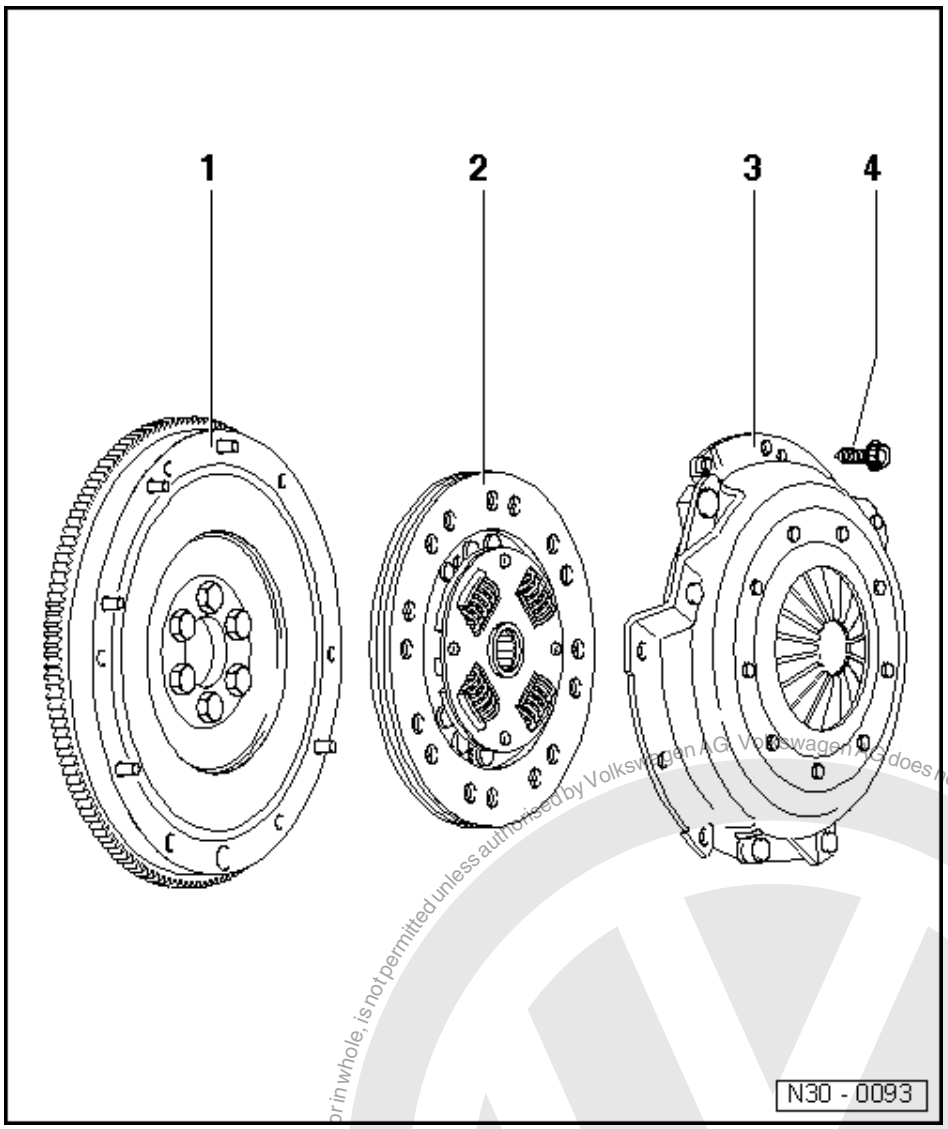


Modifications to clutch for Diesel engine vehicles =>Page 49

2 Clutch plate

- Diameter
  =>from page 2
- Note installation position, spring cage faces to pressure plate
- Centring => Fig. 1
- Lightly grease splines

*Note:*

*Clean input shaft splines and on used clutch plates, the hub splines, remove corrosion and apply only a very thin coating of grease Part No: G 000 100 to the input shaft splines. Then move clutch plate to and fro on input shaft until hub moves freely on shaft. Excess grease must be removed.*

Protected by copyright. Copying for private or commercial purposes, in part or in whole, is not permitted unless authorised by Volkswagen AG. Volkswagen AG does not guarantee or accept any liability with respect to the correctness of information in this document. Copyright by Volkswagen AG.
satelettronica

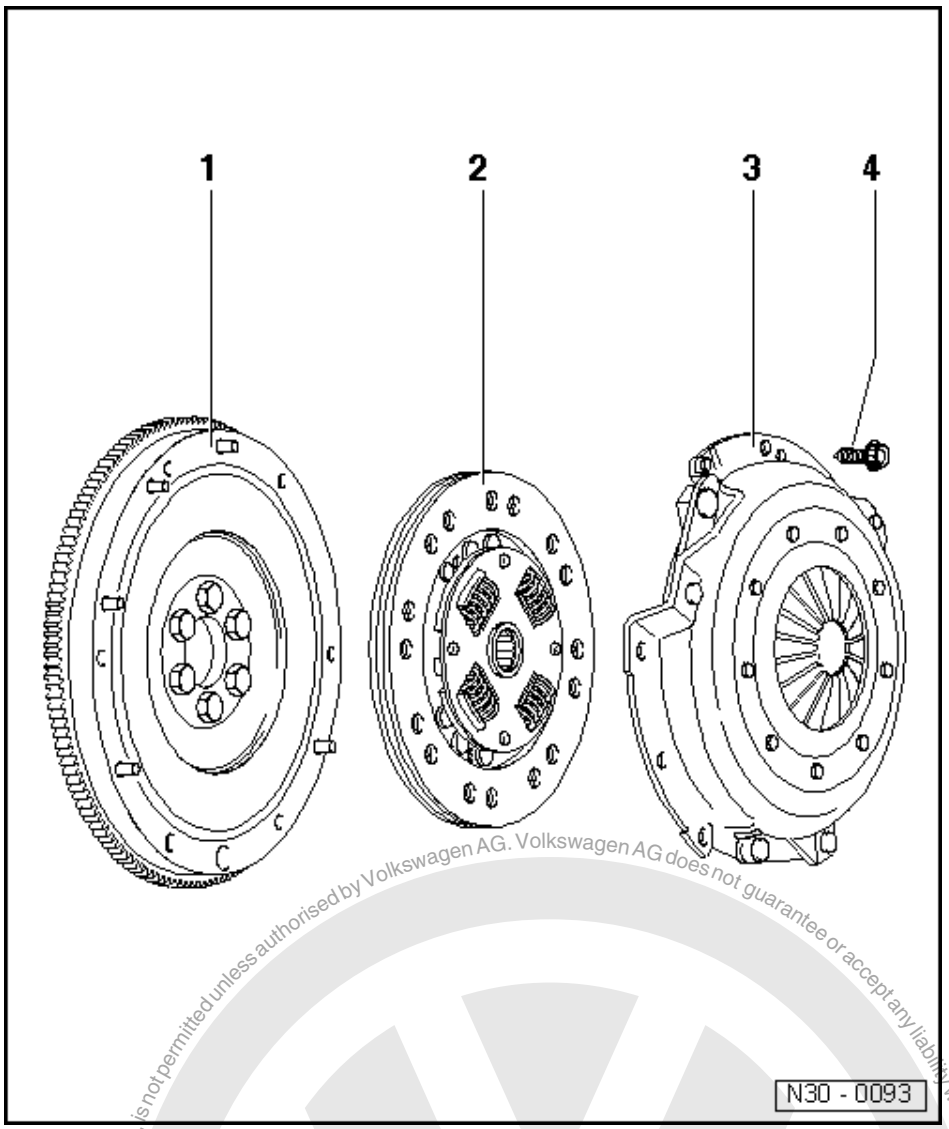


Modifications to clutch for Diesel engine vehicles =>Page 49

3 Pressure plate

- Removing and installing => Fig. 1
- Check ends of diaphragm spring => Fig. 2

*Note:*

*Pressure plates are protected against corrosion and greased. Only the contact surface may be cleaned, otherwise the service life of the clutch will be considerably reduced.*

4 Twelve point bolt, 20 Nm

- Loosen and tighten gradually and diagonally

Protected by copyright. Copying for private or commercial purposes, in part or in whole, is not permitted unless authorised by Volkswagen AG. Volkswagen AG does not guarantee or accept any liability with respect to the correctness of information in this document. Copyright by Volkswagen AG.
satelettronica

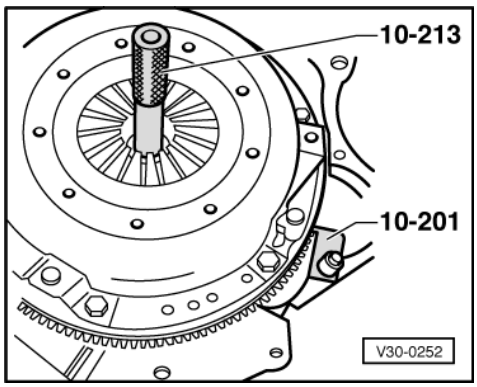


-> Fig.1 Centring clutch plate and removing and installing pressure plate

- Loosen and tighten bolts gradually and diagonally.
- Reverse position of counter-hold 10-201 when removing.

The special tool 10-213 has been superseded by 10-213 A when reordering.

***Note:***

*Pressure plate contact surface and clutch plate must make full contact with flywheel. Tighten bolts diagonally and evenly to prevent damage to the centring holes in the pressure plate housing and the centring pins in the flywheel.*

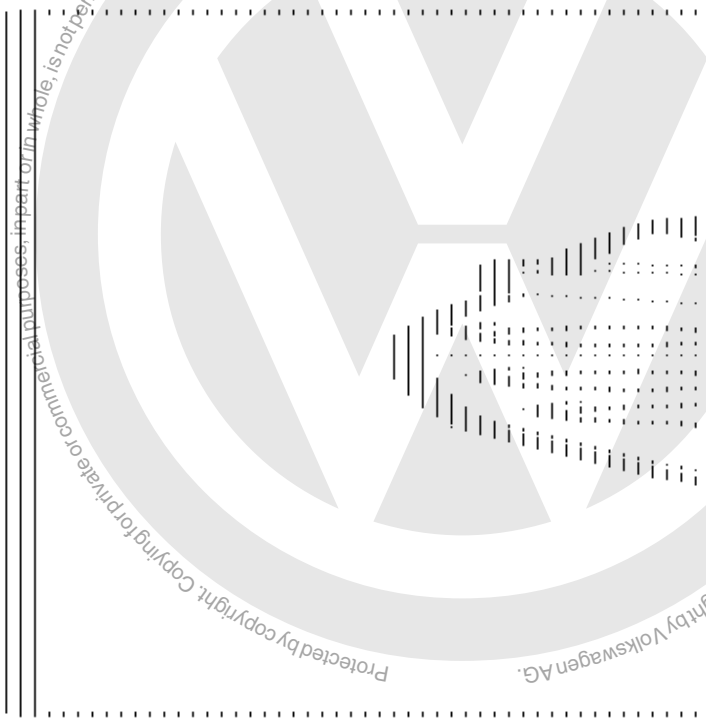

-> Fig.2 Checking ends of the diaphragm spring (arrows)

- Wear up to half the thickness of the diaphragm spring is permitted.

Protected by copyright. Copying for private or commercial purposes, in part or in whole, is not permitted unless authorised by Volkswagen AG. Volkswagen AG does not guarantee or accept any liability with respect to the correctness of information in this document. Copyright by Volkswagen AG.
satelettronica

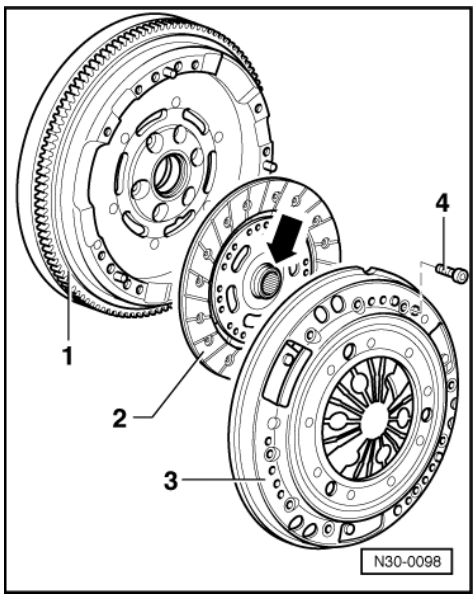


-> The clutch has been modified on vehicles with a Diesel engine:

- The Diesel engine has a two-part flywheel -1- fitted. The outer diameter and the diameter in the area of the clutch plate is smaller than the flywheel used in conjunction with a petrol engine.

- Removing and installing flywheel

=> Repair group13

- The clutch plate -2- also has a smaller diameter =>from Page 2 .

Installation position:

The shorter end of the hub (arrow) faces to pressure plate -3-.

- Centralizing clutch plate => Fig. 1

- The pressure plate -3- has been matched to the flywheel and the clutch plate.

- Removing and installing pressure plate => Fig. 1

Tightening torque

Pressure plate socket head bolts -4- to flywheel: 10 Nm.

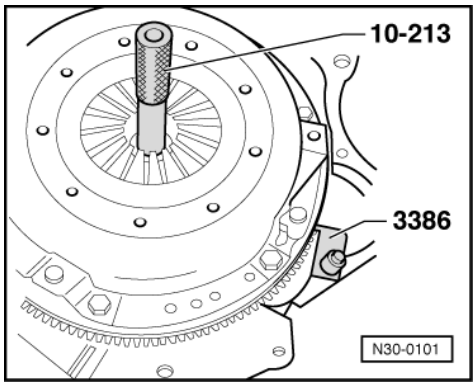


-> Fig.1 Centring clutch plate and removing and installing pressure plate

- Loosen and tighten bolts gradually and diagonally.

Protected by copyright. Copying for private or commercial purposes, in part or in whole, is not permitted unless authorised by Volkswagen AG. Volkswagen AG does not guarantee or accept any liability with respect to the correctness of information in this document. Copyright by Volkswagen AG.
satelettronica

- Reverse position of counter-hold tool 3386 when removing.

*Note:*

*Pressure plate contact surface and clutch plate must make full contact with flywheel. Tighten bolts diagonally and evenly to prevent damage to the centring holes in the pressure plate housing and the centring pins in the flywheel.*

Protected by copyright. Copying for private or commercial purposes, in part or in whole, is not permitted unless authorised by Volkswagen AG. Volkswagen AG does not guarantee or accept any liability with respect to the correctness of information in this document. Copyright by Volkswagen AG.
satelettronica

# 34 - Controls, Housing

## 1 - Servicing selector mechanism (rod selector mechanism)

### 1.1 - Servicing selector mechanism (rod selector mechanism)

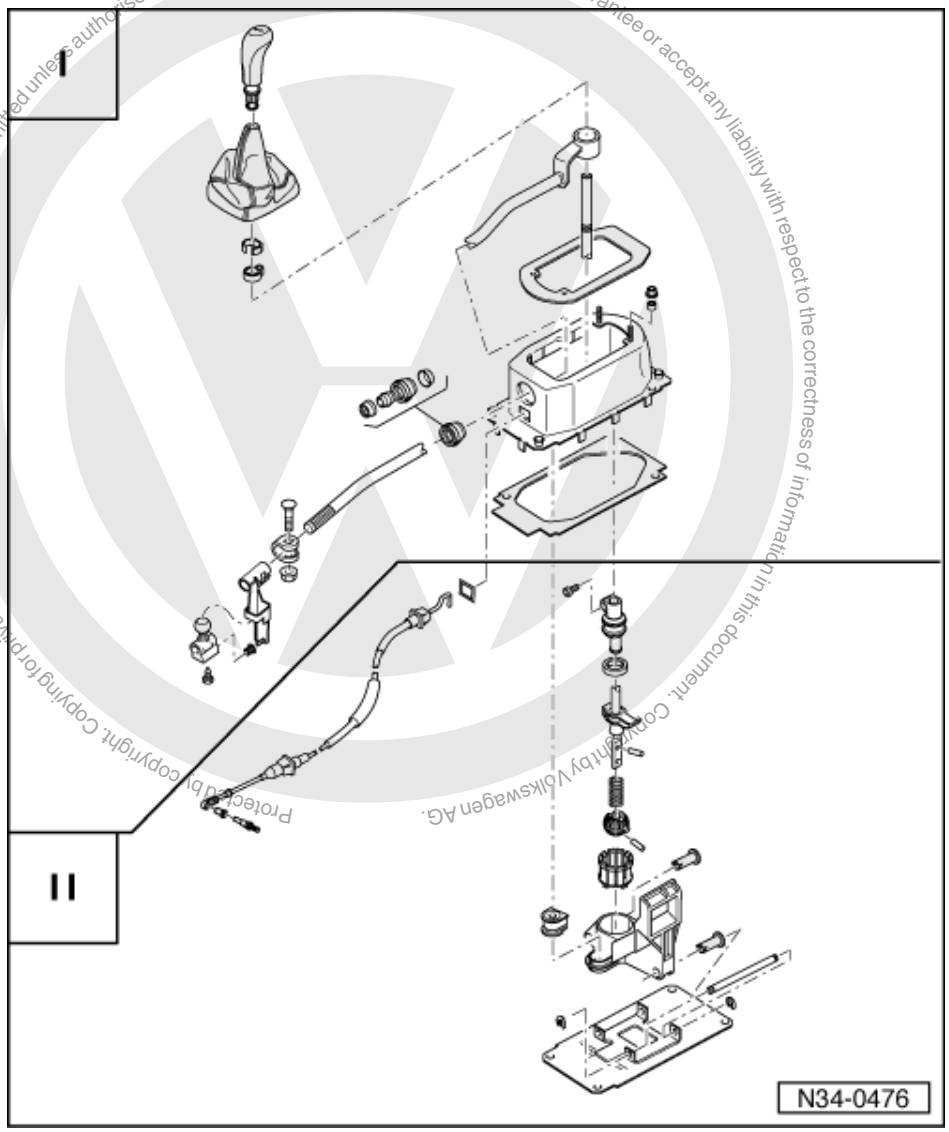


Protected by copyright. Copying for private or commercial purposes, in part or in whole, is not permitted unless authorised by Volkswagen AG. Volkswagen AG does not guarantee or accept any liability with respect to the correctness of information in this document. Copyright by Volkswagen AG.

satelettronica

*Note:*

*Lubricate all mountings and sliding surfaces with Polyurea grease Part No. G 052 142 A2.*

I - Servicing gear stick housing and selector rod => Page 52
II - Servicing gear stick and cable => Page 56

Removing and installing gear change mechanism => Page 60

## 1.2 - I - Servicing gear stick housing and selector rod

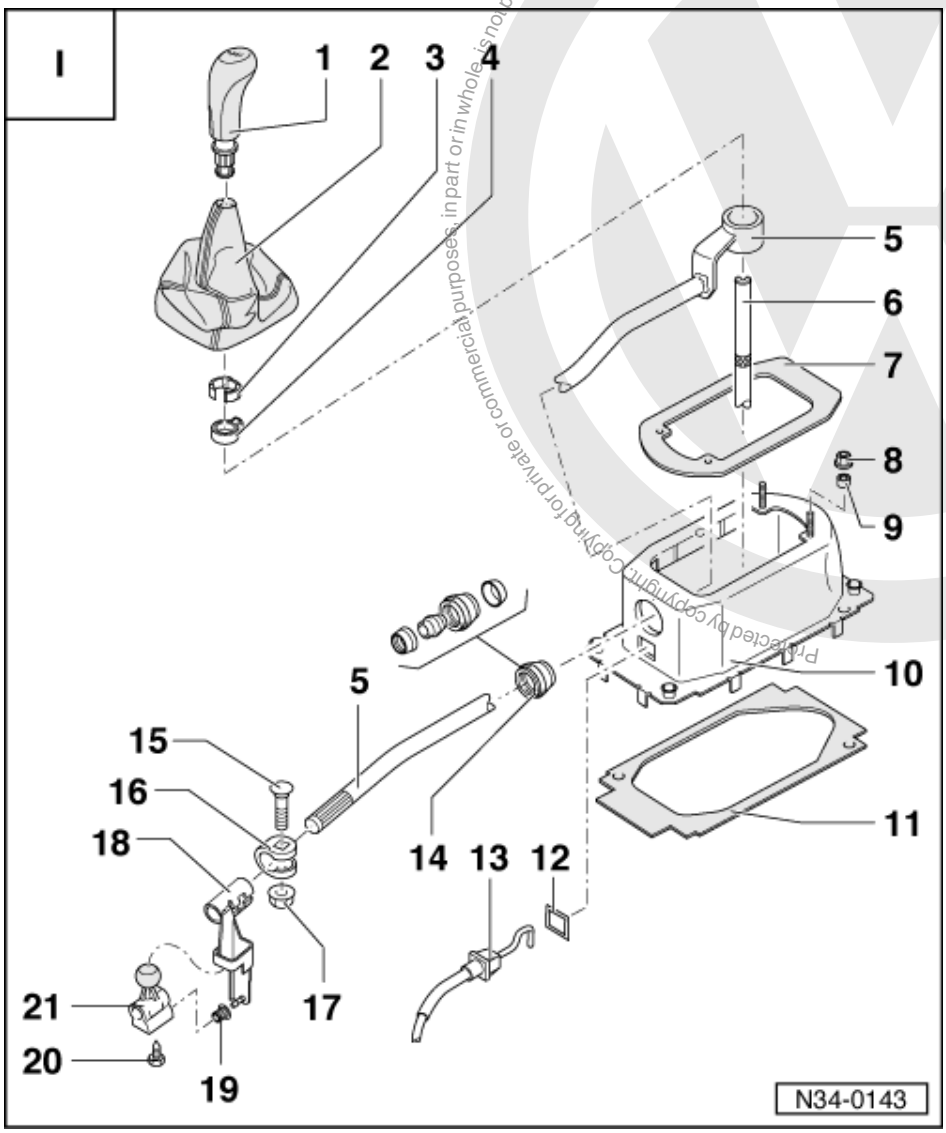


1 Gear stick knob
2 Cover
- Pull off from frame
- Connect to gear stick knob before installing =>Page 55

3 Sleeve
4 Clamp
- To secure gear stick knob on gear stick

5 Selector rod
6 Gearbox selector lever
7 Gasket
- Between selector housing and floor
- Self-adhesive
- Bond to gear stick housing

Protected by copyright. Copying for private or commercial purposes, in part or in whole, is not permitted unless authorised by Volkswagen AG. Volkswagen AG does not guarantee or accept any liability with respect to the correctness of information in this document. Copyright by Volkswagen AG.
satelettronica

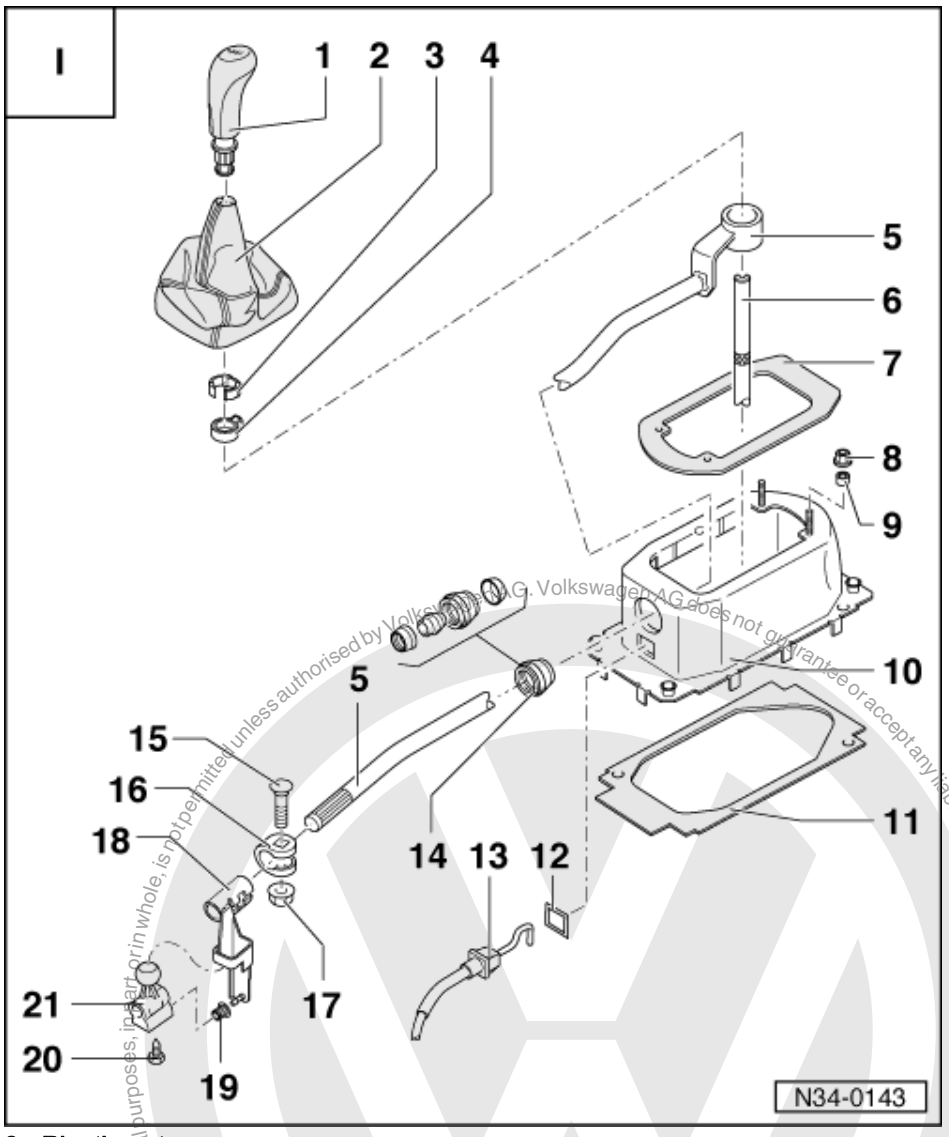


8 Plastic nut
- For console on gear stick housing
- Remove before removing gear selector mechanism

9 Spacer sleeve
- Between console and gear stick housing

10 Selector housing

11 Gasket
- Between gear stick housing and base plate
- Self-adhesive
- Bond to gear stick housing

12 Gasket

13 Cable
- Ensures that the assembly movement is not transmitted directly to the gear stick.

Protected by copyright. Copyright by Volkswagen AG. Volkswagen AG does not guarantee or accept any liability with respect to the correctness of information in this document. Copyright by Volkswagen AG. Reproduction, in part or in whole, is not permitted unless authorised by Volkswagen AG for commercial purposes.
satelettronica

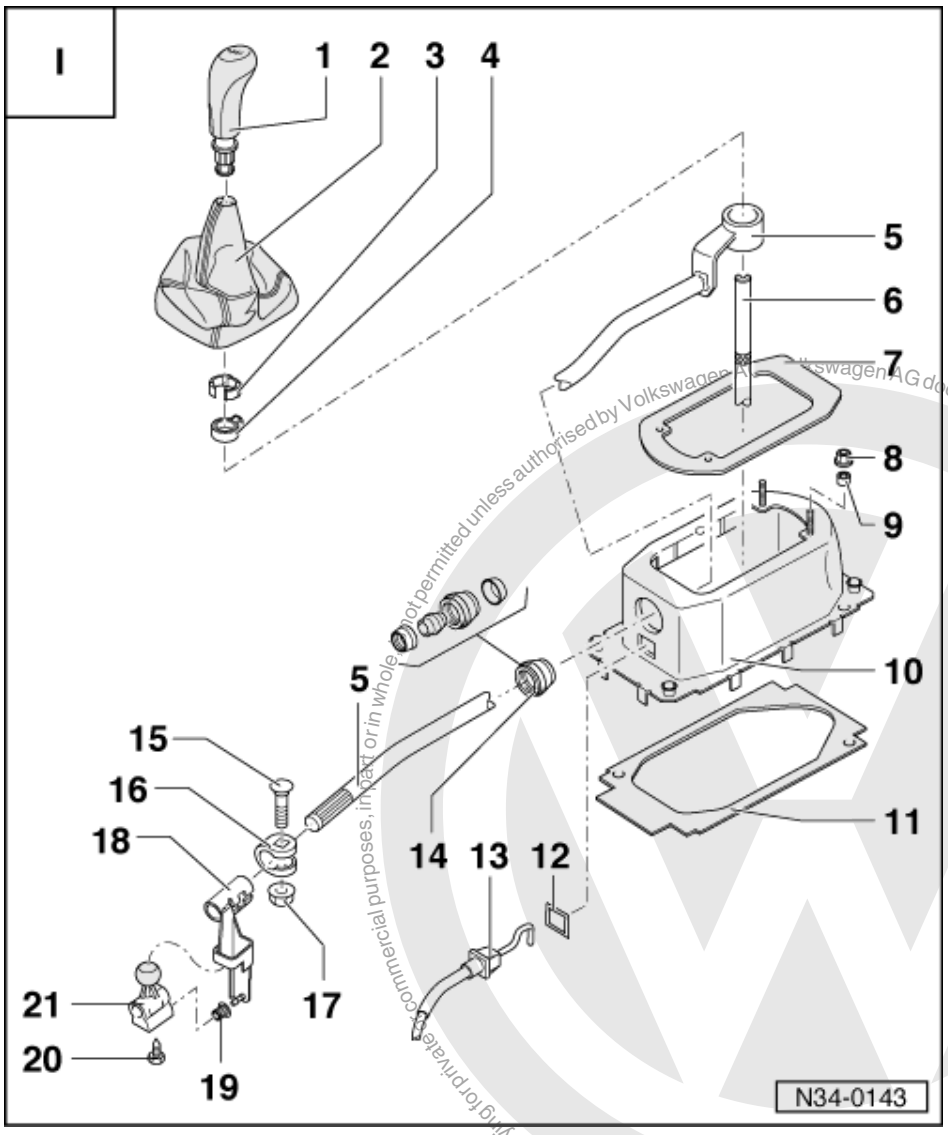


14 Selector rod bearing
- Multi component
- Is destroyed during removal
- When installing ensure that both plastic half cups are not pressed apart

15 Bolt

16 Hose clip

17 Hexagon nut, 20 Nm
- After installing adjust gear selector mechanism => Page 64

18 Angle finger

19 Mounting bush

20 Hexagon bolt, 20 Nm

21 Selector finger

Protected by copyright. Copying for private or commercial purposes, in part or in whole, is not permitted unless authorised by Volkswagen AG. Volkswagen AG does not guarantee or accept any liability with respect to the correctness of information in this document. Copyright by Volkswagen AG.
satelettronica

## 1.3 - Installing gear stick gaiter to gear stick knob

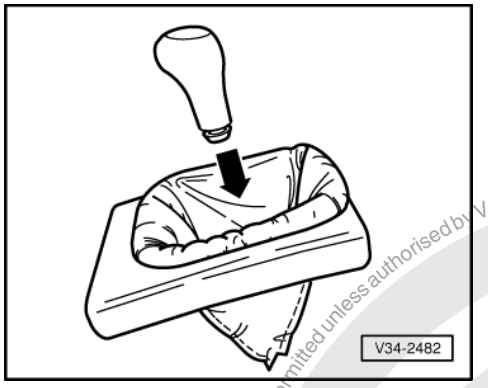


- Turn cover inside out.
- -> Insert gear stick knob in gaiter (arrow).
- Insert clamping sleeve and engage
- Fit clamp onto gear stick knob.
- Push gear stick knob and gaiter together onto gear stick lever to stop.

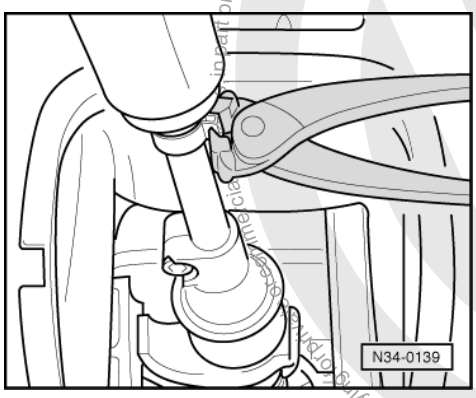


- -> Tension gear stick knob clamp.
- Clip cover into console.

Protected by copyright. Copyright by Volkswagen AG. Volkswagen AG does not guarantee or accept any liability with respect to the correctness of information in this document. Copyright by Volkswagen AG.
satelettronica

## 1.4 - II - Servicing gear stick and cable

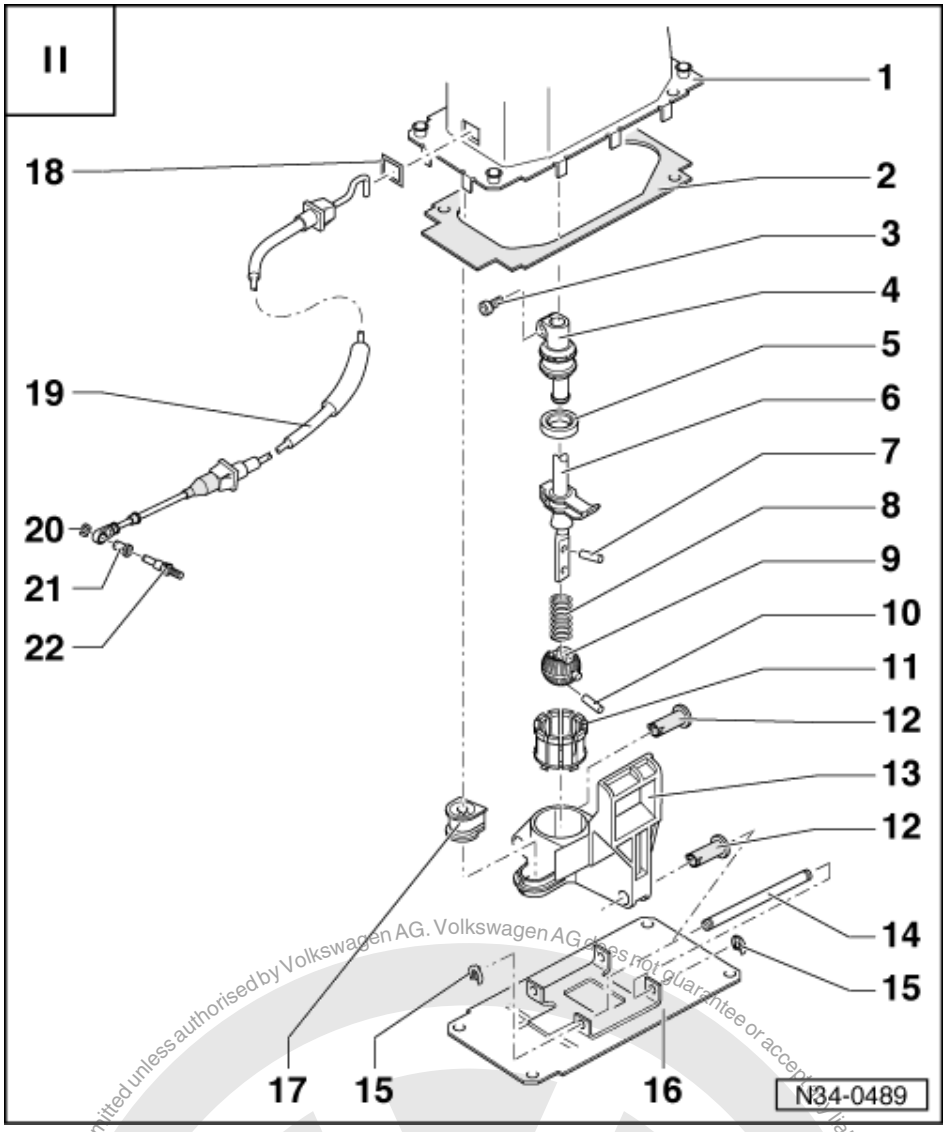


1 Gear stick housing
2 Gasket
- Between gear stick housing and base plate
- Self-adhesive
- Bond to gear stick housing

3 Bolt, 2 Nm
4 Adjustment eccentric
- Engage into gear stick
- After installing adjust gear selector mechanism => Page 64
- Modification:
  Cannot be removed individually with bowed gear stick

5 Synthetic ring
6 Gearbox selector lever
7 Spring pin
- Drive in and out with drift

satelettronica
Protected by copyright. Copying for private or commercial purposes, in part or in whole, is not permitted unless authorised by Volkswagen AG. Volkswagen AG does not guarantee or accept any liability with respect to the correctness of information in this document. Copyright by Volkswagen AG.

Protected by copyright. Copying for private or commercial purposes, in part or in whole, is not permitted unless authorised by Volkswagen AG. Volkswagen AG does not guarantee or accept any liability with respect to the correctness of information in this document. Copyright by Volkswagen AG.

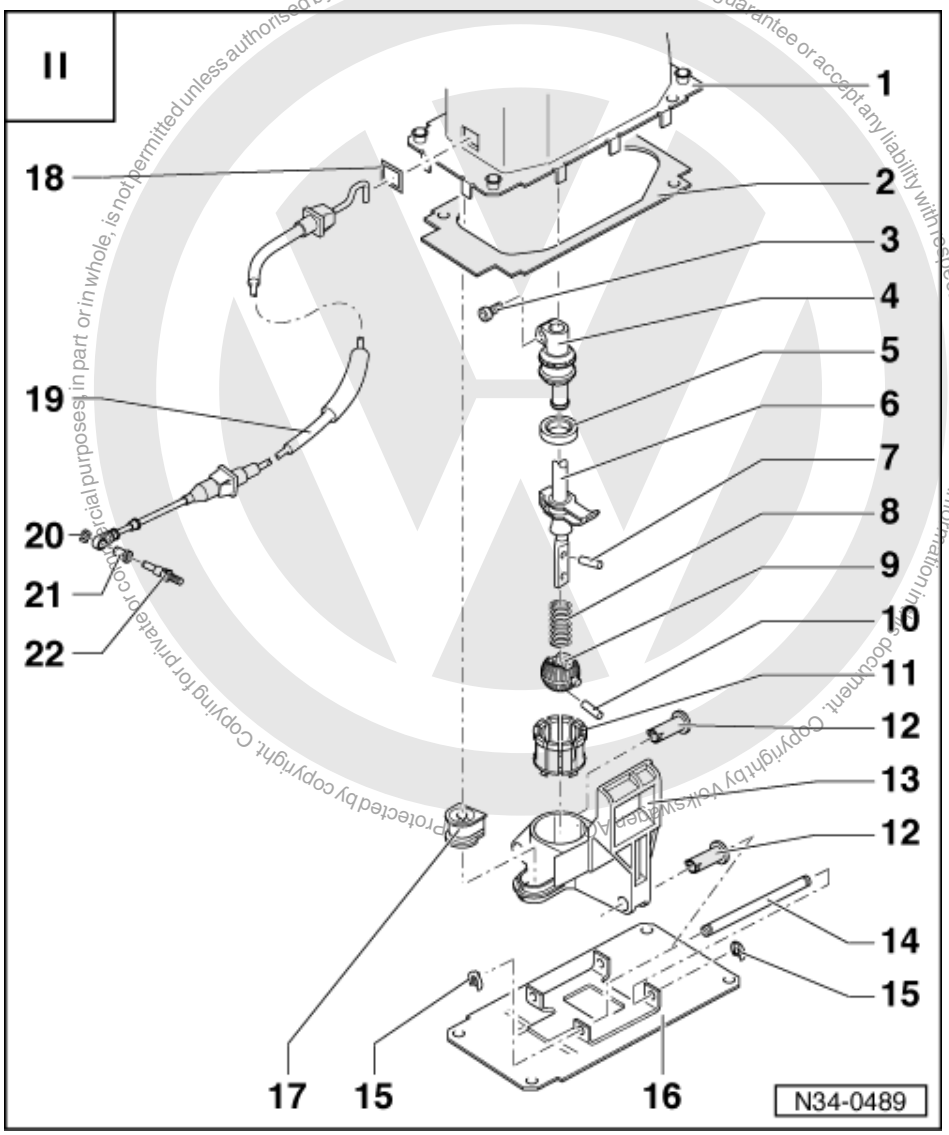


8 Spring
9 Ball
10 Spring pin
- Removing and installing=>Fig. 3

11 Bearing
- Press out of guide together with gear stick => Fig. 1
- Press into guide together with gear stick => Fig. 2

12 Bush
- For fulcrum pin

13 Guide
14 Fulcrum pin
15 Lock washer
16 Base plate
- Open tabs on gear stick housing to remove.

satelettronica

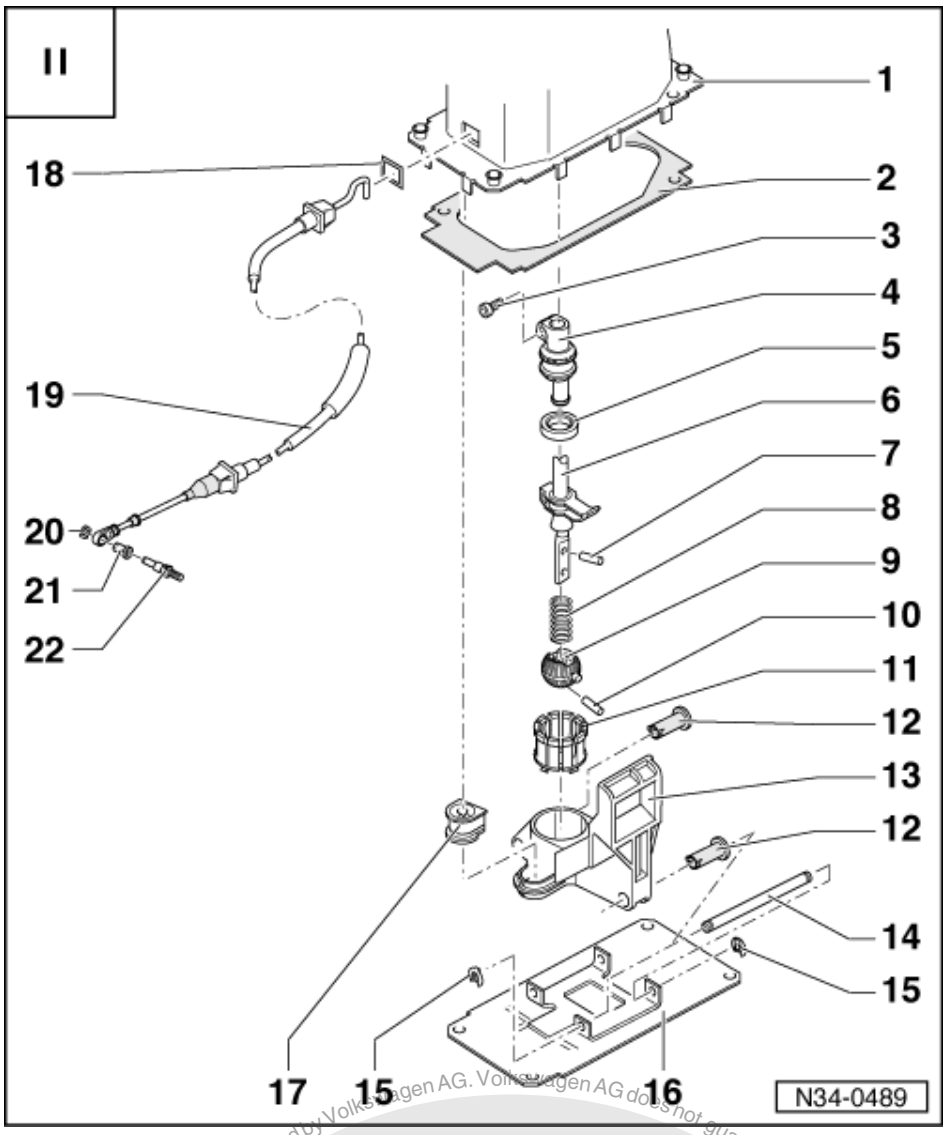


17 Retainer
- For cable (Item 19 )
- If it cannot be pushed in and out by hand then press in and out using press tool VW 408a.

18 Gasket

19 Cable
- Ensures that the assembly movement is not transmitted directly to the gear stick.
- Carefully press hook in onto stop.

20 Lock washer
- Always renew, if fitted

21 Bush
- Renew after pulling off cable
- Press in and out with drift

22 Pin, 20 Nm
- Screw into gearbox

satelettronica

Protected by copyright. Copying for private or commercial purposes, in part or in whole, is not permitted unless authorised by Volkswagen AG. Volkswagen AG does not guarantee or accept any liability with respect to the correctness of information in this document. Copyright by Volkswagen AG.

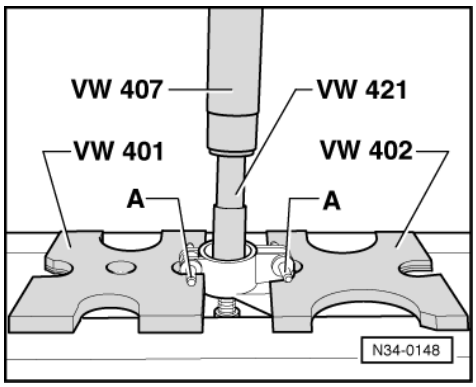


-> Fig.1 Pressing bearing together with gear stick out of guide

A - Pivot pin for guide

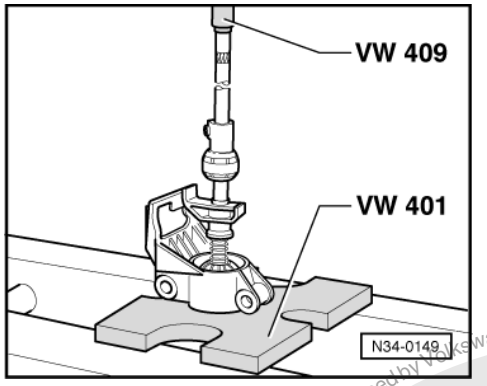


-> Fig.2 Pressing bearing together with gear stick into guide

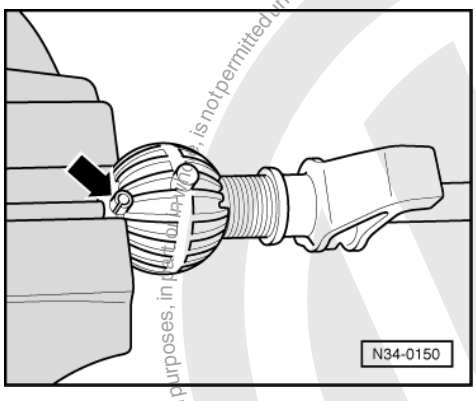


-> Fig.3 Removing and installing spring pin

- Tension gear stick in a vice as shown.
- Drive spring pin (arrow) in and out with drift.

Protected by copyright. Copying for private or commercial purposes, in part or in whole, is not permitted unless authorised by Volkswagen AG. Volkswagen AG does not guarantee or accept any liability with respect to the correctness of information in this document. Copyright by Volkswagen AG.
satelettronica

## 1.5 - Removing and installing gear change mechanism

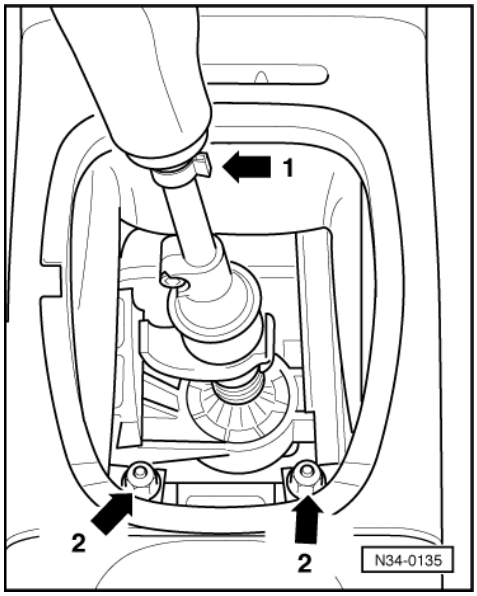


### Removing

- Pull cover off frame.
- -> Destroy clip (arrow 1) and pull gear lever knob off with gaiter.
- Remove rubber cover, if fitted, to do this pull frame off.
- Remove central console/gear stick housing securing nuts (arrows 2).

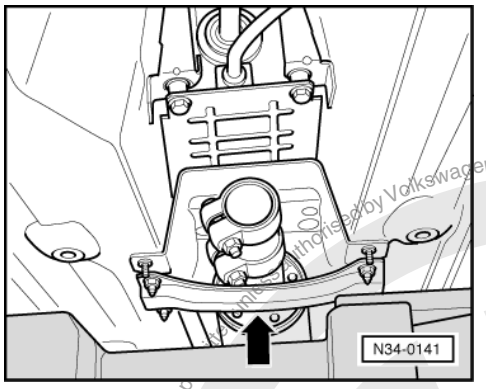


- Remove Lambda probe from front exhaust pipe if fitted.
- Removing front exhaust pipe.

=> Repair group 26; Removing and installing parts of exhaust system. Removing and installing parts of exhaust system.

- Remove front heat shield.
- -> Remove front cross support (arrow), below the exhaust system.

Protected by copyright. Copying for private or commercial purposes, in part or in whole, is not permitted unless authorised by Volkswagen AG. Volkswagen AG does not guarantee or accept any liability with respect to the correctness of information in this document. Copyright by Volkswagen AG.

satelettronica

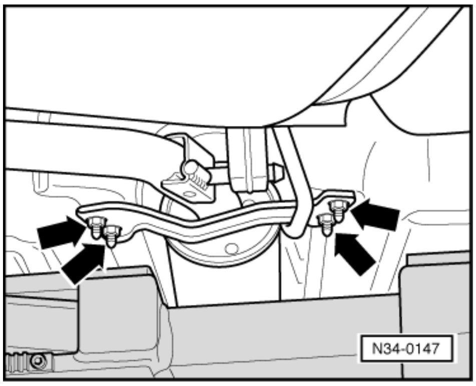


- -> Unbolt rear cross support (arrows) together with rear exhaust system.
- Lower rear exhaust system carefully and support.

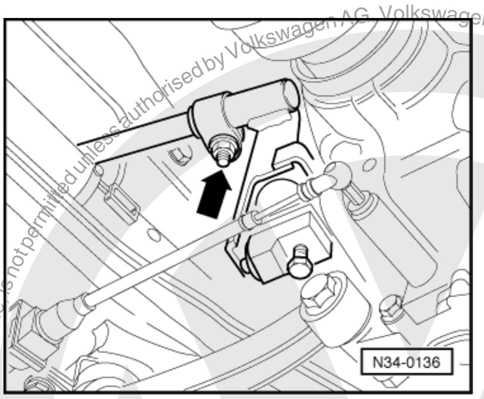


- -> Loosen clamp (arrow) and separate the selector rod/angle finger connection.

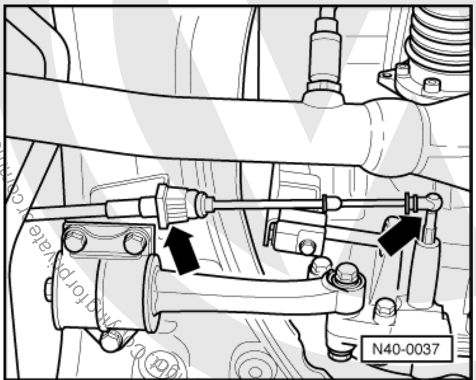


- Lever off circlip for cable, if fitted, between selector lever and gearbox at gearbox.
- -> Lever off cable, running between selector lever and gearbox, at gearbox and pull out of mounting on assembly carrier (arrows), to do this squeeze tabs together.

Protected by copyright. Copying for private or commercial purposes, in part or in whole, is not permitted unless authorised by Volkswagen AG. Volkswagen AG does not guarantee or accept any liability with respect to the correctness of information in this document. Copyright by Volkswagen AG.
satelettronica

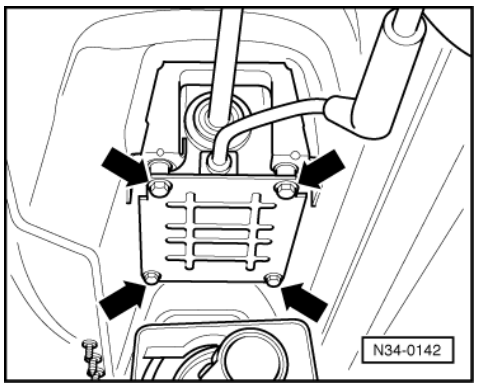


- -> Unbolt gear stick housing from body (arrows).

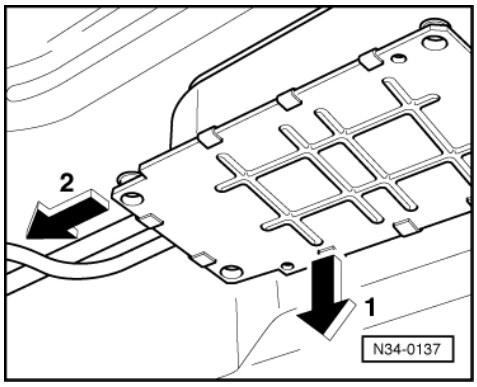


- -> Swing gear stick housing with selector rod down (arrow 1), when doing this guide over gearbox (arrow 2) then remove.

Installing

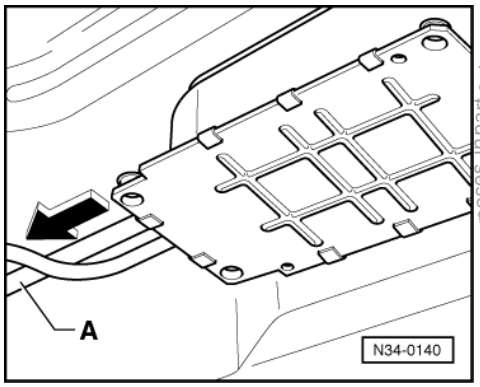


- -> Guide selector rod -A- over assembly carrier and gearbox (direction of arrow).
- Pull gear stick housing back and turn so that the selector rod is stress-free and insert into vehicle floor.
- Secure gear stick housing.

Protected by copyright. Copying for private or commercial purposes, in part or in whole, is not permitted unless authorised by Volkswagen AG. Volkswagen AG does not guarantee or accept any liability with respect to the correctness of information in this document. Copyright by Volkswagen AG.
satelettronica

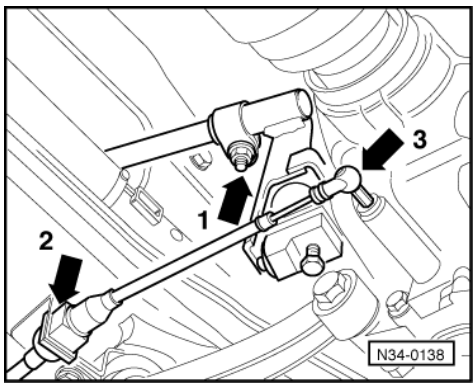


- -> Guide selector rod into clamp (arrow -1-), to do this push gearbox selector shaft inwards.
- Renew bush in cable between selector mechanism and gearbox (arrow -3-).
- Engage cable, running between selector mechanism and gearbox, into mounting on assembly carrier and push onto gearbox (arrows -2- and -3-).
- Press circlip for cable onto gearbox, if fitted.

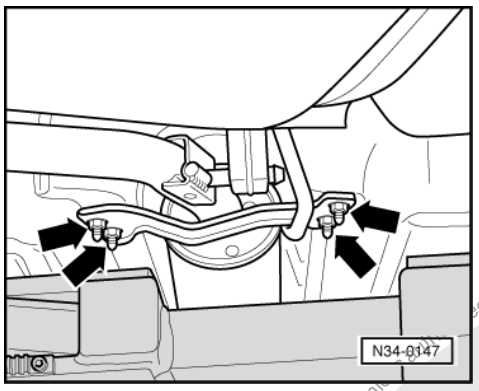


- -> Tighten rear cross support together with rear exhaust pipe (arrows) and rear heat shield securely.
- Install front heat shield.
- Installing front exhaust pipe

=> 4-Cyl. engine, Mechanics, Repair group 26

- Screw in Lambda probe if equipped for probe.
- Install front cross support under exhaust system.

- Install central console/gear stick housing securing nuts.

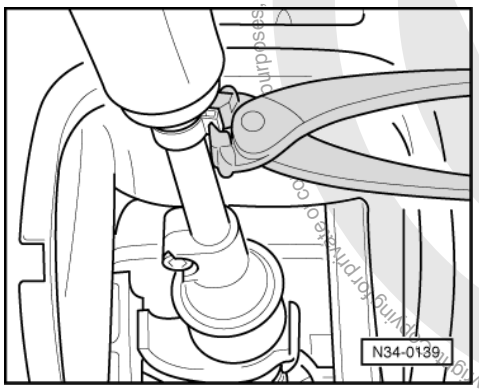


- Adjust gear change linkage => Page 64
- Remove rubber cover if fitted.
- Push gear stick knob onto gear stick together with cover onto stop.
- -> Tension gear stick knob clamp.
- Clip cover into console.

satelettronica
Protected by copyright. Copying for private or commercial purposes, in part or in whole, is not permitted unless authorised by Volkswagen AG. Volkswagen AG does not guarantee or accept any liability with respect to the correctness of information in this document. Copyright by Volkswagen AG.

Tightening torque

| | |
|---|---|
| Gear stick housing to body | 25 Nm |

## 1.6 - Adjusting selector mechanism (rod selector mechanism)

Gearbox in neutral.

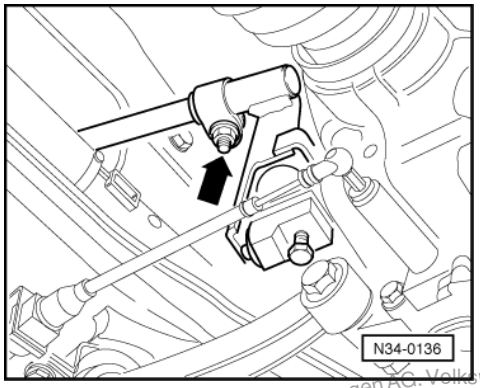


- -> Loosen clamp (arrow). The connection selector rod/angle finger must be free to move.

*Note:*

- Move the selector rod to and fro several times in the angle finger to ensure that it moves easily.

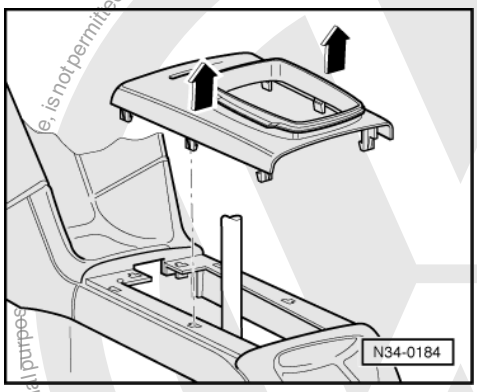


- Pull the gear stick cover off the centre console cover.
- -> Then pull the centre console cover, vertically upwards (arrows).
- Remove rubber cover, if fitted.

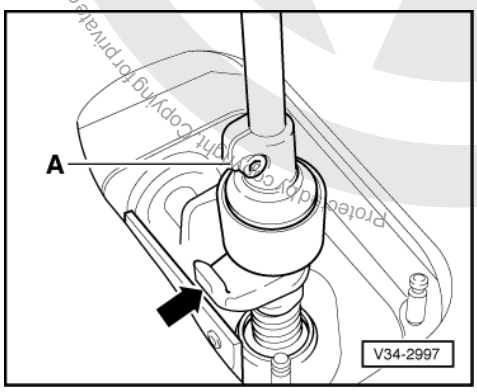


- -> The eccentric adjuster on gear stick must be so aligned that the clamp -A- faces to reverse gear hook (arrow).

Protected by copyright. Copying for private or commercial purposes, is not permitted unless authorised by Volkswagen AG. Volkswagen AG does not guarantee or accept any liability with respect to the correctness of information in this document. Copyright by Volkswagen AG.

satelettronica

- Select 5th gear with gear stick.

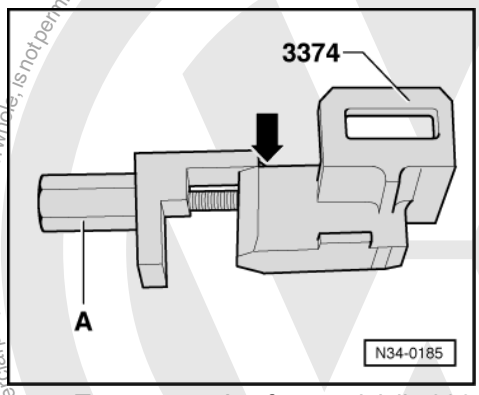


-> Turn screw -A- of gear stick jig 3384 out until the angled piece is still just in contact with main body (arrow).

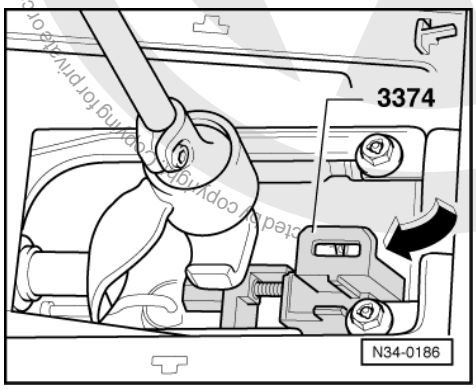


The gear stick jig is then inserted as follows:

- -> Guide in (direction of arrow) from the rear of the centre console below the reverse gear hook.

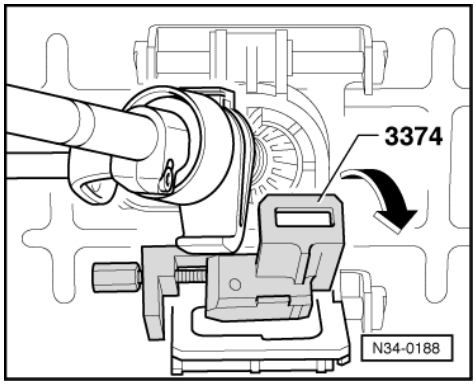


- -> Then it is rotated into the recess in the guide for the reverse gear hook (direction of arrow).

Copyright by Volkswagen AG. Volkswagen AG does not guarantee or accept any liability with respect to the correctness of information in this document. Copying for private or commercial purposes, in part or in whole, is not permitted unless authorised by Volkswagen AG.
satelettronica

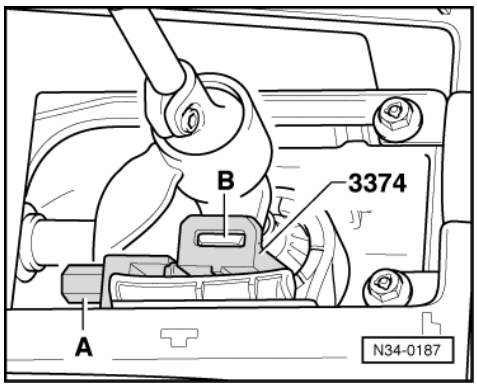


- -> Now tighten bolt -A- and push the gear stick jig down.
- Move gear stick into neutral, press gear stick down and insert reverse gear hook in the recess -B- in the gear stick jig.

- Then align selector rod and angle finger stress-free.

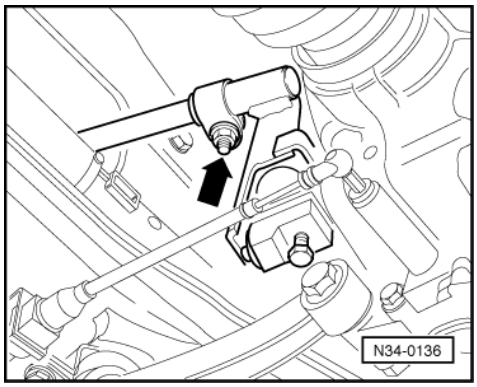


*Note:*

- Please ensure that the gearbox is not in gear (neutral position).

- -> Tighten clamp (arrow).
- Remove gear stick jig.
- Fit covers for centre console and gear stick.

**Tightening torque**

| | |
|---|---|
| Clamp for selector rod | 25 Nm |

**Functional check**

- In neutral the gear stick must be in the 3rd/4th gear gate.

- Operate clutch.
- Select all gears several times. Pay particular attention to the operation of the reverse gear lock.

Should a gear fail to engage smoothly after repeated selection, then continue as follows:

- Engage 1st gear.

Protected by copyright. Copying for private or commercial purposes, in part or in whole, is not permitted unless authorised by Volkswagen AG. Volkswagen AG does not guarantee or accept any liability with respect to the correctness of information in this document. Copyright by Volkswagen AG.

satelettronica

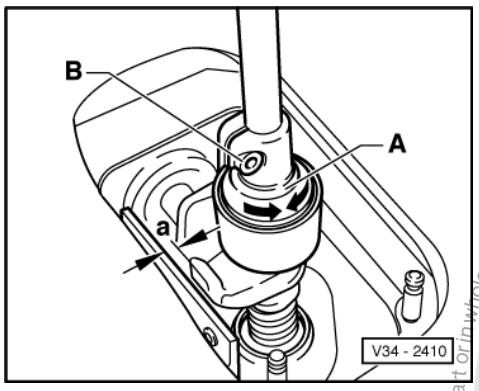


- Remove play from selector mechanism by carefully pushing gear stick to the left.

• -> The distance between gear stick stop and gear stick housing must be1.0 mm to 2.0 mm (dimension -a-).

- Should this not be the case, perform fine adjustment with 1st gear selected =>Page 67 .

***Note:***

*A prerequisite for correct gear linkage adjustment is that the operating and transfer elements of the selector mechanism are in good condition.*

*Gearbox, clutch and clutch release mechanism must also be in good condition.*

**Fine adjustment**

• 1st gear selected.

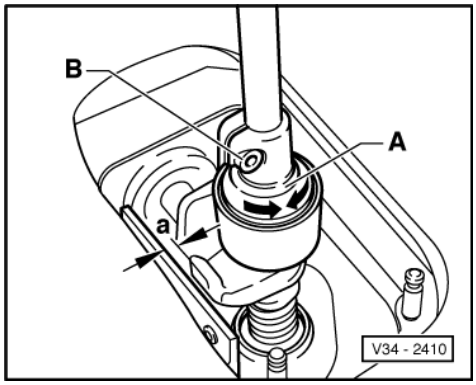


- -> Loosen clamp bolt -B-.

• The distance between gear stick stop and gear stick housing must be1.0 mm to 2.0 mm (dimension -a-).

- Set to dimension -a- by turning the adjustment eccentric -A-.
- Tighten clamp bolt -B-.
- Fit gear stick cover.

**Tightening torque**

| | |
|---|---|
| Clamping bolt for eccentric adjuster | 2 Nm |

Protected by copyright. Copyright by Volkswagen AG.
Copying for private or commercial purposes, in part or in whole, is not permitted unless authorised by Volkswagen AG. Volkswagen AG does not guarantee or accept any liability with respect to the correctness of information in this document.
satelettronica

# 2 - Servicing selector mechanism (cable selector mechanism)

## 2.1 - Servicing selector mechanism (cable selector mechanism)

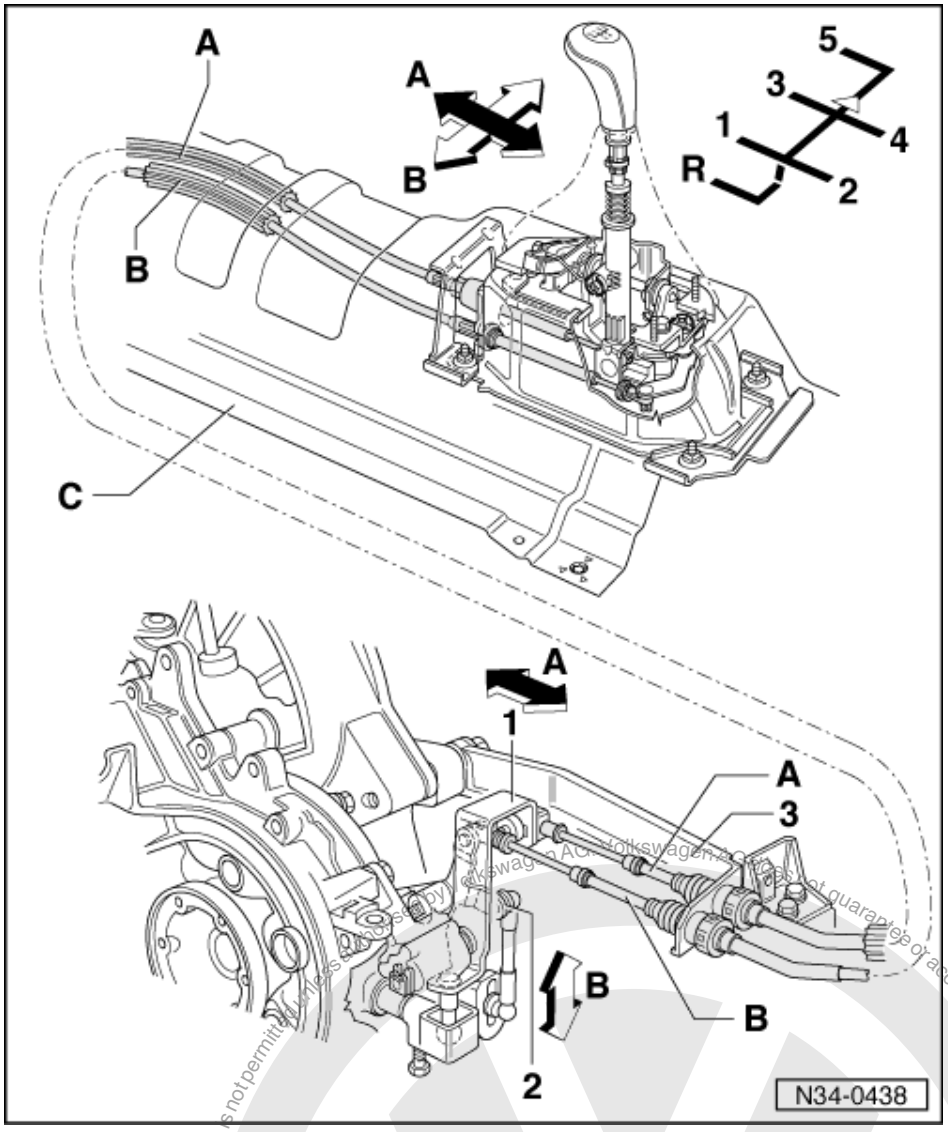


## 2.2 - Installation position of gear selector mechanism

A - Gear change cable
B - Gate selector cable
C - Heat shield

Arrow -A- Gear selection movement

Arrow -B- Gate selection movement

1 Gear selector lever
2 Relay lever with gate rod
3 Support bracket

satelettronica

- Is bolted on gearbox and assembly carrier

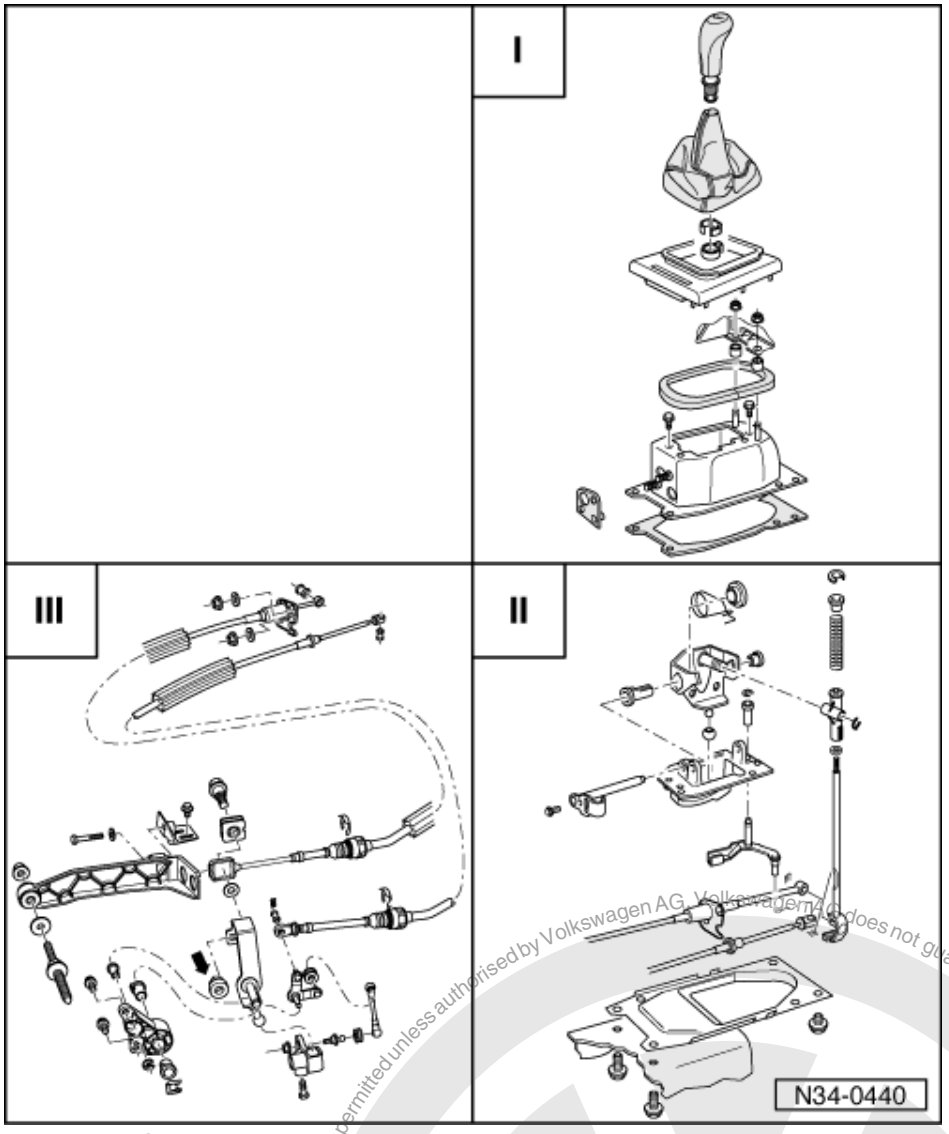


I - Servicing gear stick housing => Page 70
II - Servicing gear stick => Page 73
III - Assembly overview: Removing and installing operating cables => Page 76

Removing and installing selector mechanism => Page 82

***Note:***

*Lubricate all mountings and sliding surfaces with Polyurea grease Part No. G 052 142 A2.*

Protected by copyright. Copying for private or commercial purposes, in part or in whole, is not permitted unless authorised by Volkswagen AG. Volkswagen AG does not guarantee or accept any liability with respect to the correctness of information in this document. Copyright by Volkswagen AG.
satelettronica

## 2.3 - I - Servicing gear stick housing

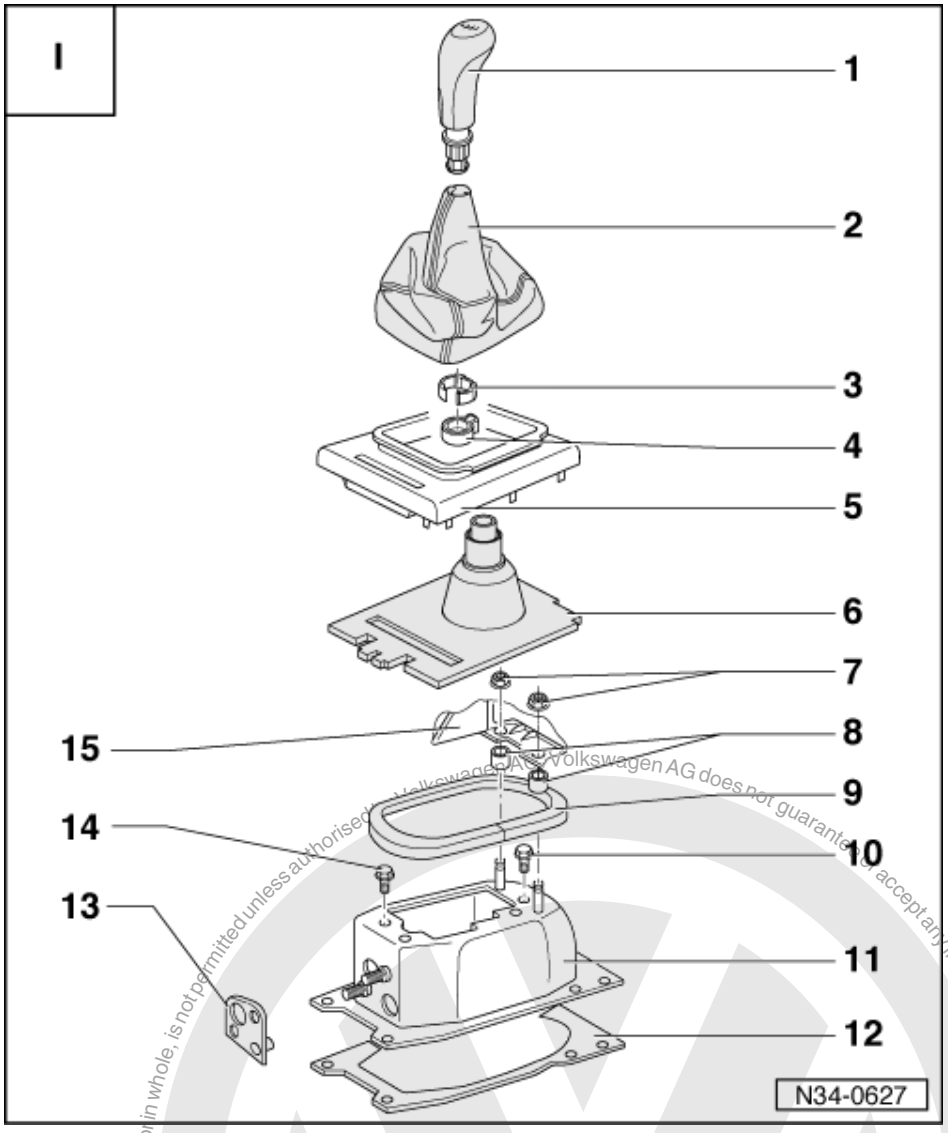


1 Gear stick knob
2 Cover
- Pull off from frame
- Connect to gear stick knob before installing =>Page 72

3 Sleeve
4 Clamp
- To secure gear stick knob on gear stick

5 Frame
6 Rubber cover
- Not fitted on all vehicles

7 Plastic nut
- For console on gear stick housing

8 Spacer sleeve
- Between console and gear stick housing

Protected by copyright. Copying for private or commercial purposes, in part or in whole, is not permitted unless authorised by Volkswagen AG. Volkswagen AG does not guarantee or accept any liability with respect to the correctness of information in this document. Copyright by Volkswagen AG.
satelettronica

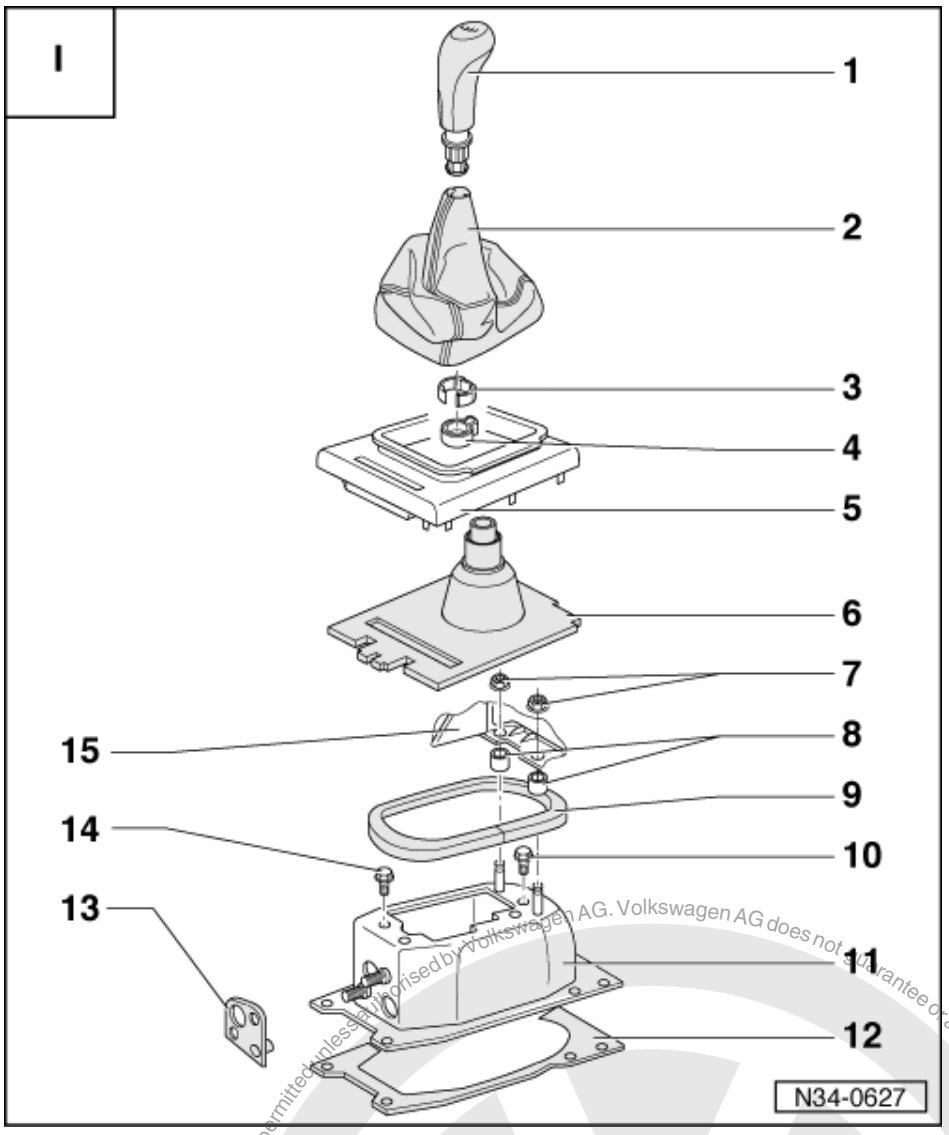


9 Gasket
- Between selector housing and floor
- Self-adhesive
- Bond to gear stick housing

10 Hexagon bolt, 15 Nm
- For mounting plate to gear stick housing

11 Selector housing

12 Gasket
- Self-adhesive
- Bond underneath gear stick housing

13 Gasket
- Between selector cables and gear stick housing

14 Hexagon bolt, 15 Nm
- For mounting plate to gear stick housing

15 Central console

satelettronica
Protected by copyright. Copying for private or commercial purposes, in part or in whole, is not permitted unless authorised by Volkswagen AG. Volkswagen AG does not guarantee or accept any liability with respect to the correctness of information in this document. Copyright by Volkswagen AG.

## 2.4 - Installing gear stick gaiter to gear stick knob

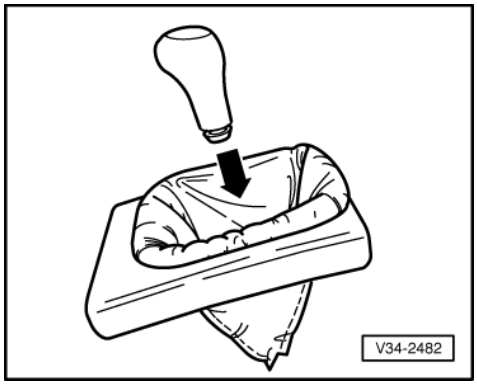


- Turn cover inside out.
- -> Insert gear stick knob in gaiter (arrow).
- Insert clamping sleeve and engage
- Fit clamp onto gear stick knob.
- Push gear stick knob and gaiter together onto gear stick lever to stop.

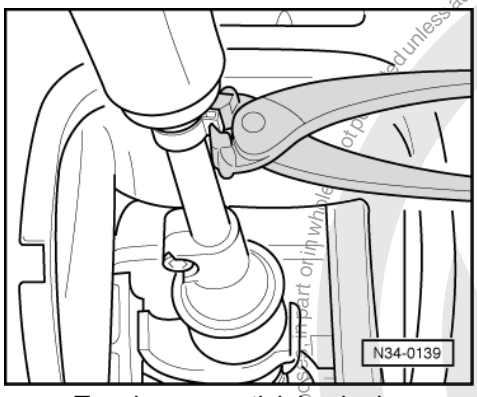


- -> Tension gear stick knob clamp.
- Clip cover into console.

Protected by copyright. Copying for private or commercial purposes, in part or in whole, is not permitted unless authorised by Volkswagen AG. Volkswagen AG does not guarantee or accept any liability with respect to the correctness of information in this document. Copyright by Volkswagen AG.
satelettronica

## 2.5 - II - Servicing gear stick

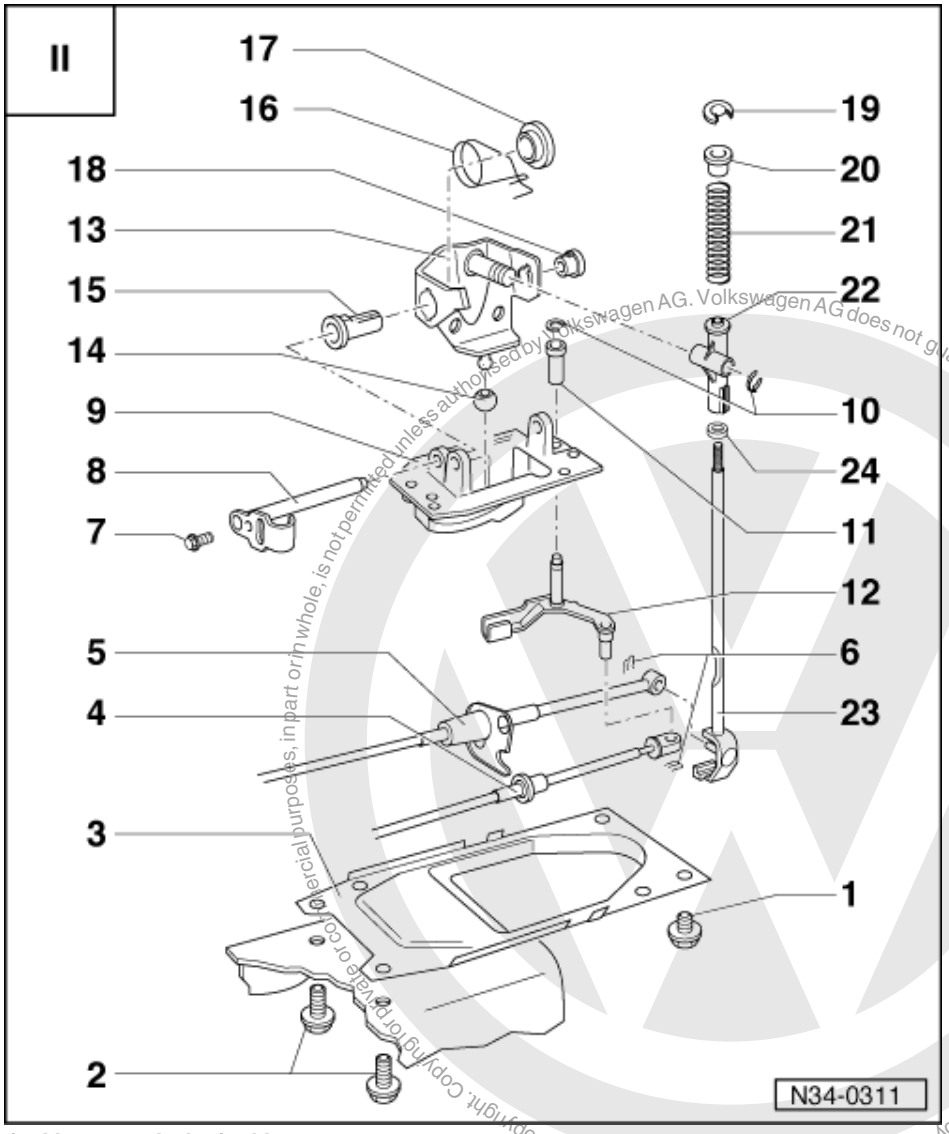


1 Hexagon bolt, 25 Nm
- For gear stick housing to body

2 Hexagon bolt, 25 Nm
- For gear stick housing to body

3 Cover plate

4 Gate selector cable
- On gate selector bracket

5 Gear selector cable
- On gear lever

6 Spring clip

7 Hexagon bolt, 15 Nm
- For fulcrum pin to mounting plate

8 Fulcrum pin

Protected by copyright. Copying for private or commercial purposes, in part or in whole, is not permitted unless authorised by Volkswagen AG. Volkswagen AG does not guarantee or accept any liability with respect to the correctness of information in this document. Copyright by Volkswagen AG.
satelettronica

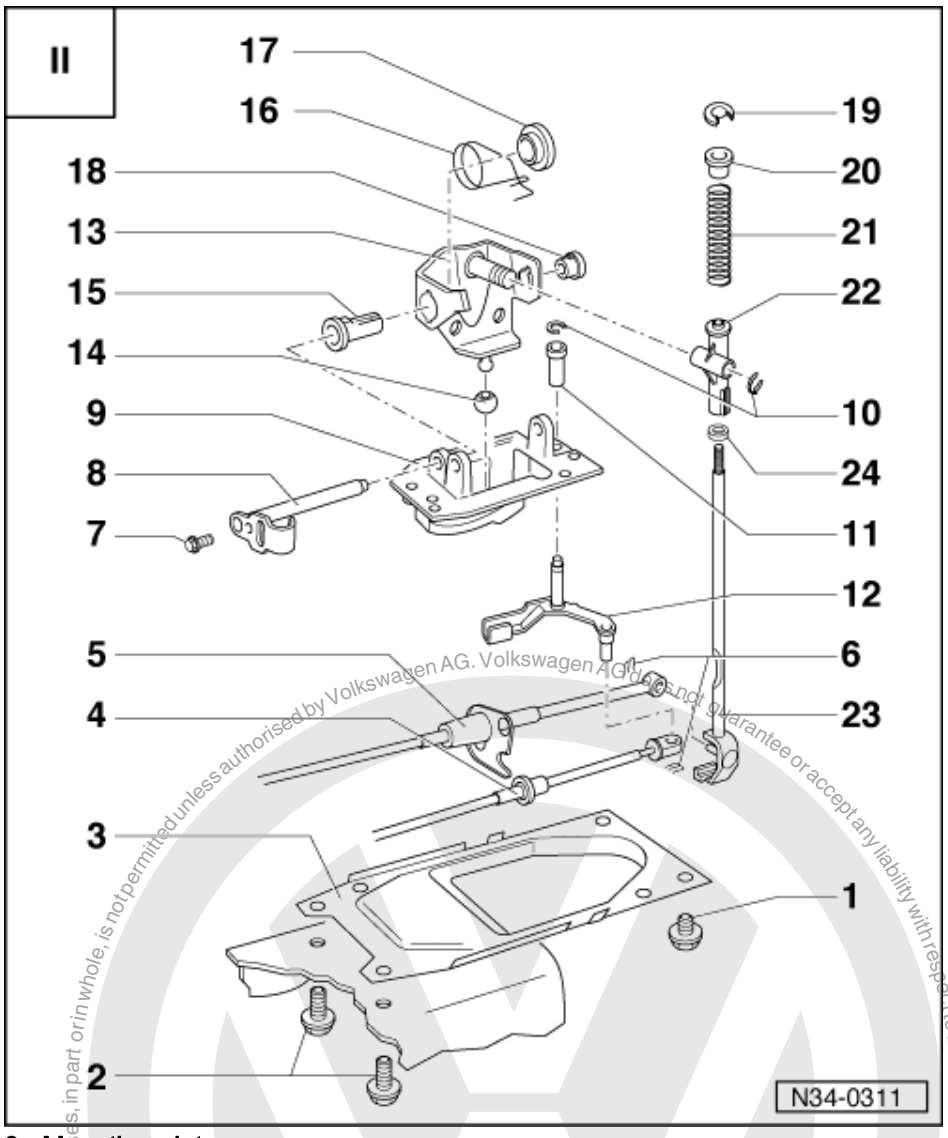


9 Mounting plate
10 Lock washer
11 Bush
- Only fits in one position

12 Gate selector bracket
13 Gate selector housing
- Fit into mounting plate after fitting the complete gear stick

14 Cap
15 Bush
16 Spring
17 Guide bush
- Locate on bush (item 15)

18 Bush

Protected by copyright. Copying for private or commercial purposes, in part or in whole, is not permitted unless authorised by Volkswagen AG. Volkswagen AG does not guarantee or accept any liability with respect to the correctness of information in this document. Copyright by Volkswagen AG.
satelettronica

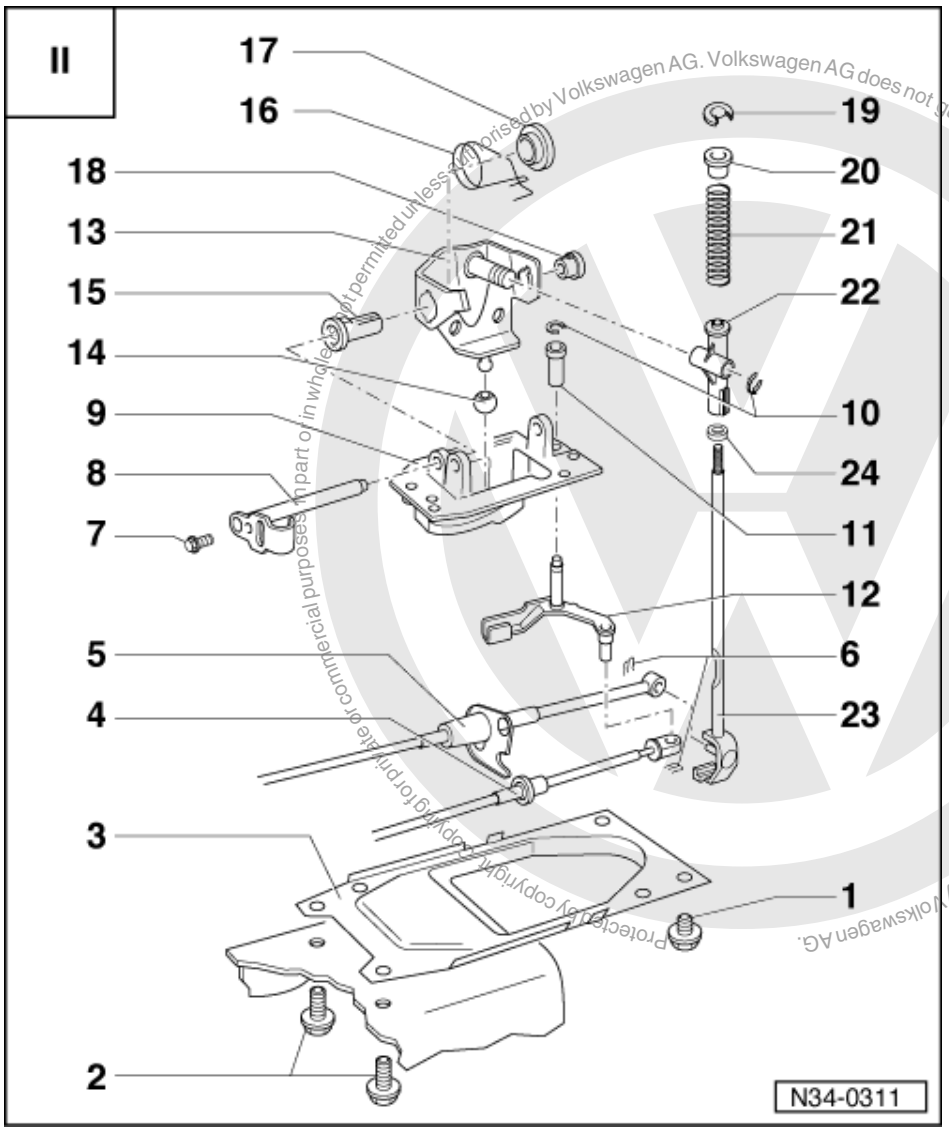


19 Circlip
20 Spacer sleeve
21 Spring
22 Gear stick guide
23 Gearbox selector lever
24 Damping washer

Protected by copyright. Copyright by Volkswagen AG. Volkswagen AG does not guarantee or accept any liability with respect to the correctness of information in this document. Copyright by Volkswagen AG. Copying for private or commercial purposes, in part or in whole, is not permitted unless authorised by Volkswagen AG.
satelettronica

## 2.6 - III - Assembly overview - removing and installing - selector cables

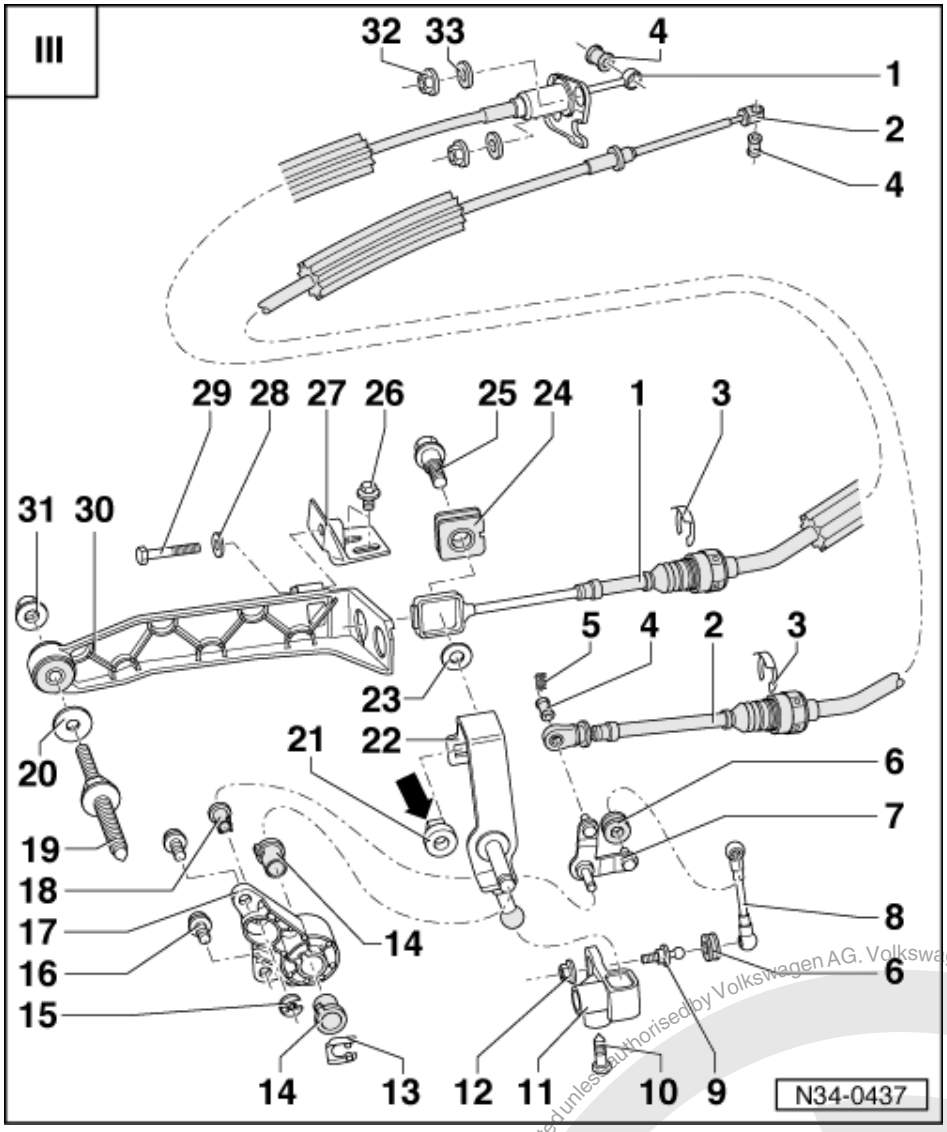


1 Gear selector cable
- Installation position => Page 68

2 Gate selector cable
- Installation position => Page 68
- Install before installing gear selector cable

3 Circlip

4 Rubber bush
- Press in and out with drift

5 Spring clip

6 Sealing washer

7 Relay lever
- Before removing, remove mounting bracket=>Page 83
- Installation position => Fig. 3

Protected by copyright. Copying for private or commercial purposes, in part or in whole, is not permitted unless authorised by Volkswagen AG. Volkswagen AG does not guarantee or accept any liability with respect to the correctness of information in this document. Copyright by Volkswagen AG.
satelettronica

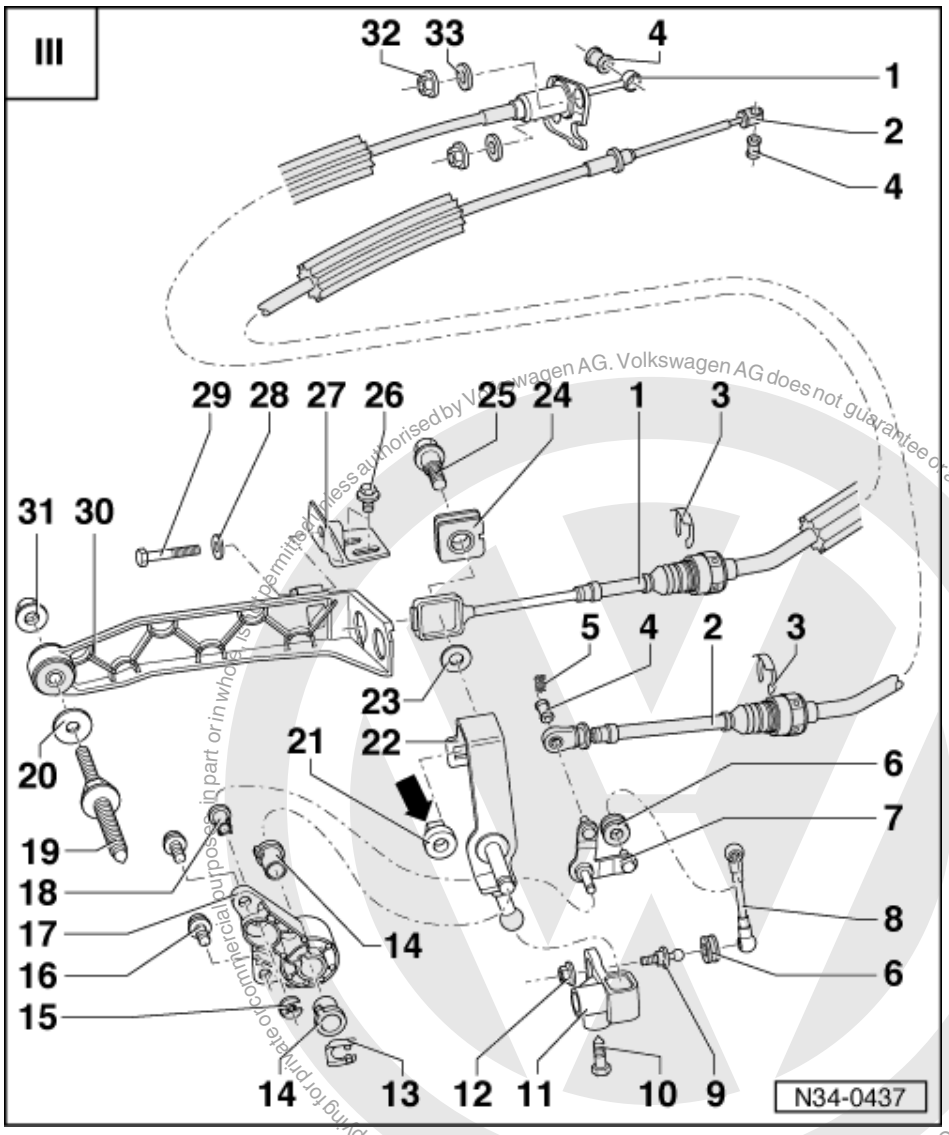


8 Gate rod
- Installation position => Fig. 3

9 Ball head

10 Hexagon bolt, 20 Nm

11 Selector finger

12 Hexagon nut, 20 Nm

13 Circlip

14 Bush
- For gearbox selector lever
- Before removing, remove mounting bracket=>Page 83
- Removing => Fig. 1
- Only fits in one position
- Press in by clamping in vice, use vice clamps

Protected by copyright. Copying for private or commercial purposes, in part or in whole, is not permitted unless authorised by Volkswagen AG. Volkswagen AG does not guarantee or accept any liability with respect to the correctness of information in this document. Copyright by Volkswagen AG.
satelettronica

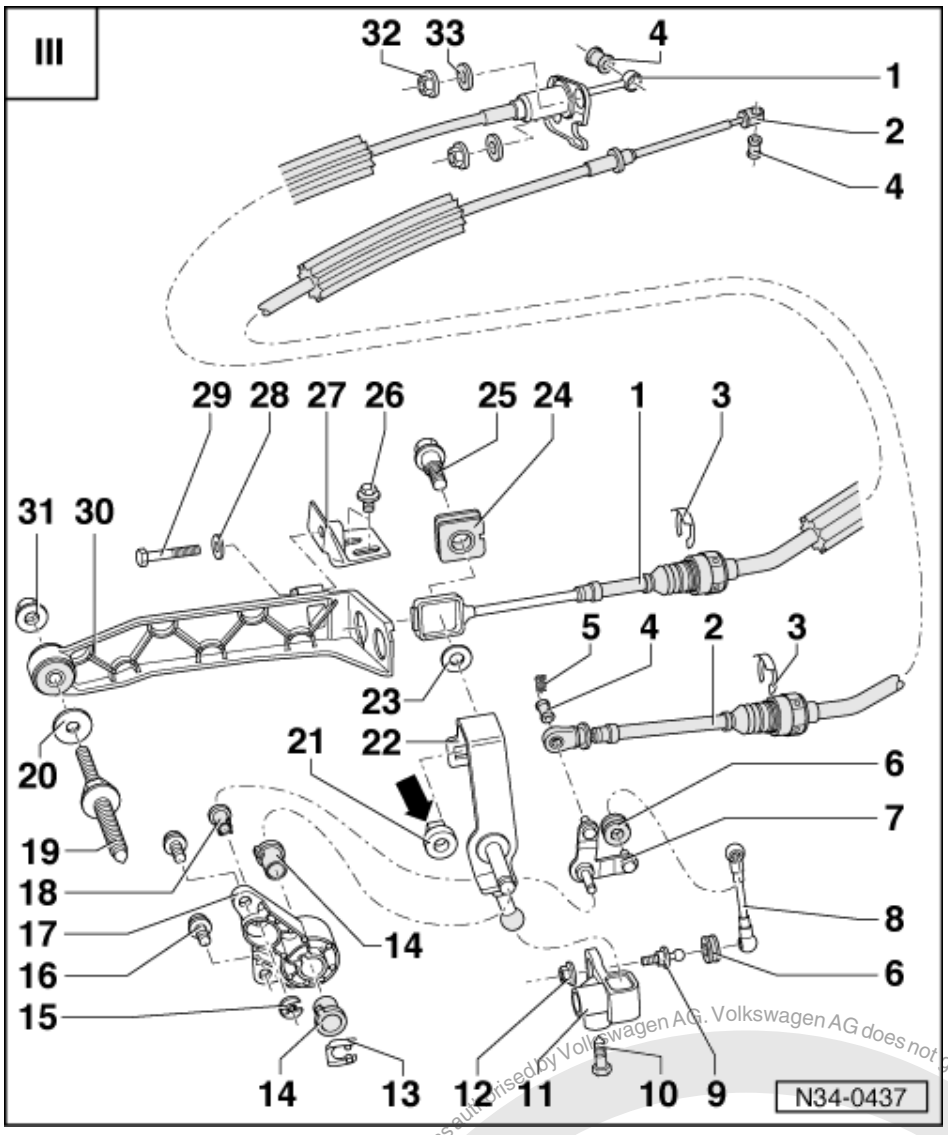


15 Circlip

16 Hexagon bolt, 25 Nm

17 Mounting bracket

- Different mounting points on Diesel engine vehicles => Parts catalogue
- Removing and installing=>Page 83

18 Bush

- For relay lever
- Before removing, remove mounting bracket=>Page 83
- Removing => Fig. 2
- Only fits in one position
- Press in by clamping in vice, use vice clamps

19 Hexagon bolt

- For gearbox to engine
- With thread to mount support bracket

satelettronica
Protected by copyright. Copying for private or commercial purposes, in part or in whole, is not permitted unless authorised by Volkswagen AG. Volkswagen AG does not guarantee or accept any liability with respect to the correctness of information in this document. Copyright by Volkswagen AG.

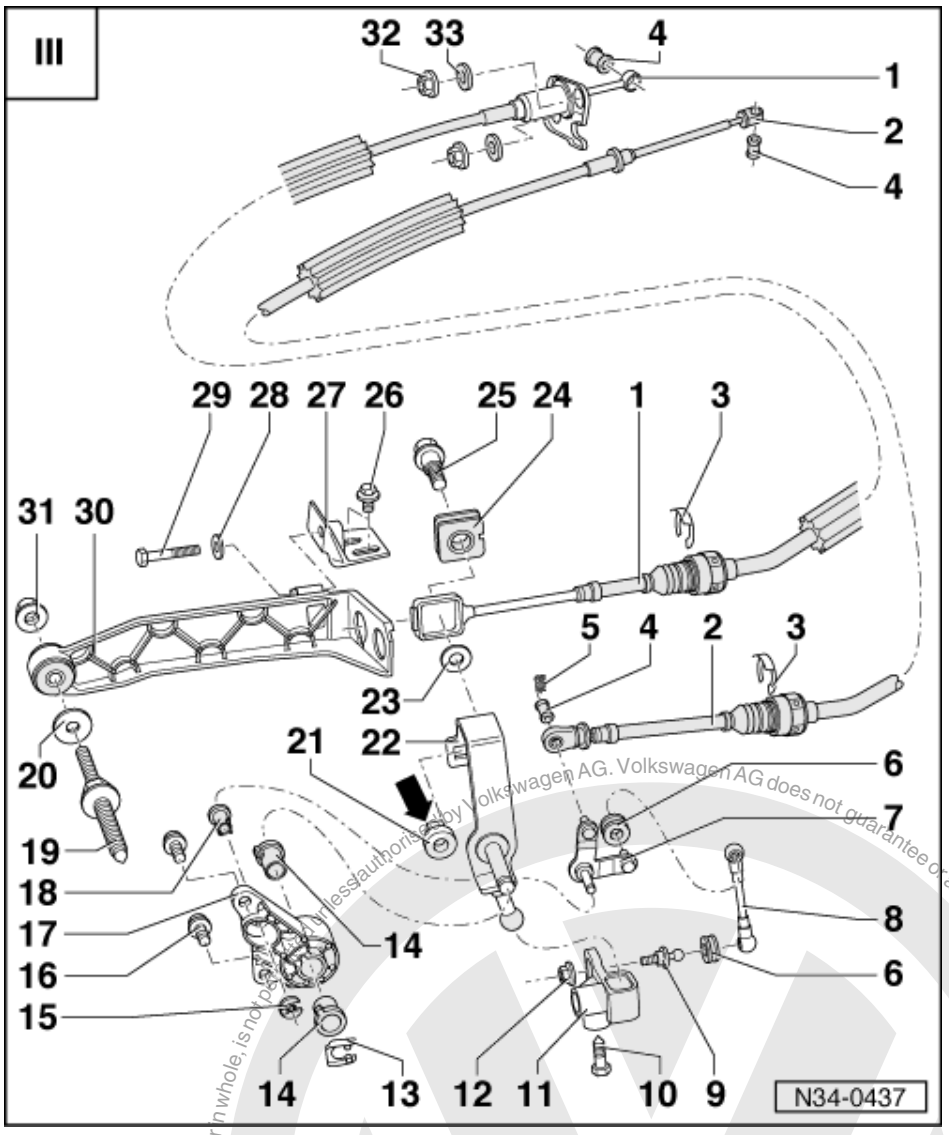


20 Washer

21 Nut

- Insert square head (arrow) in gear change lever

22 Gear selector lever

- Before removing, remove mounting bracket=>Page 83
- Installation position => Fig. 3

23 Washer

24 Rubber bush

- Press in and out with drift

25 Combi-bolt, 20 Nm

26 Hexagon bolt, 15 Nm

27 Angle piece

- For securing support bracket to assembly carrier

satelettronica
Protected by copyright. Copying for private or commercial purposes, in part or in whole, is not permitted unless authorised by Volkswagen AG. Volkswagen AG does not guarantee or accept any liability with respect to the correctness of information in this document. Copyright by Volkswagen AG.

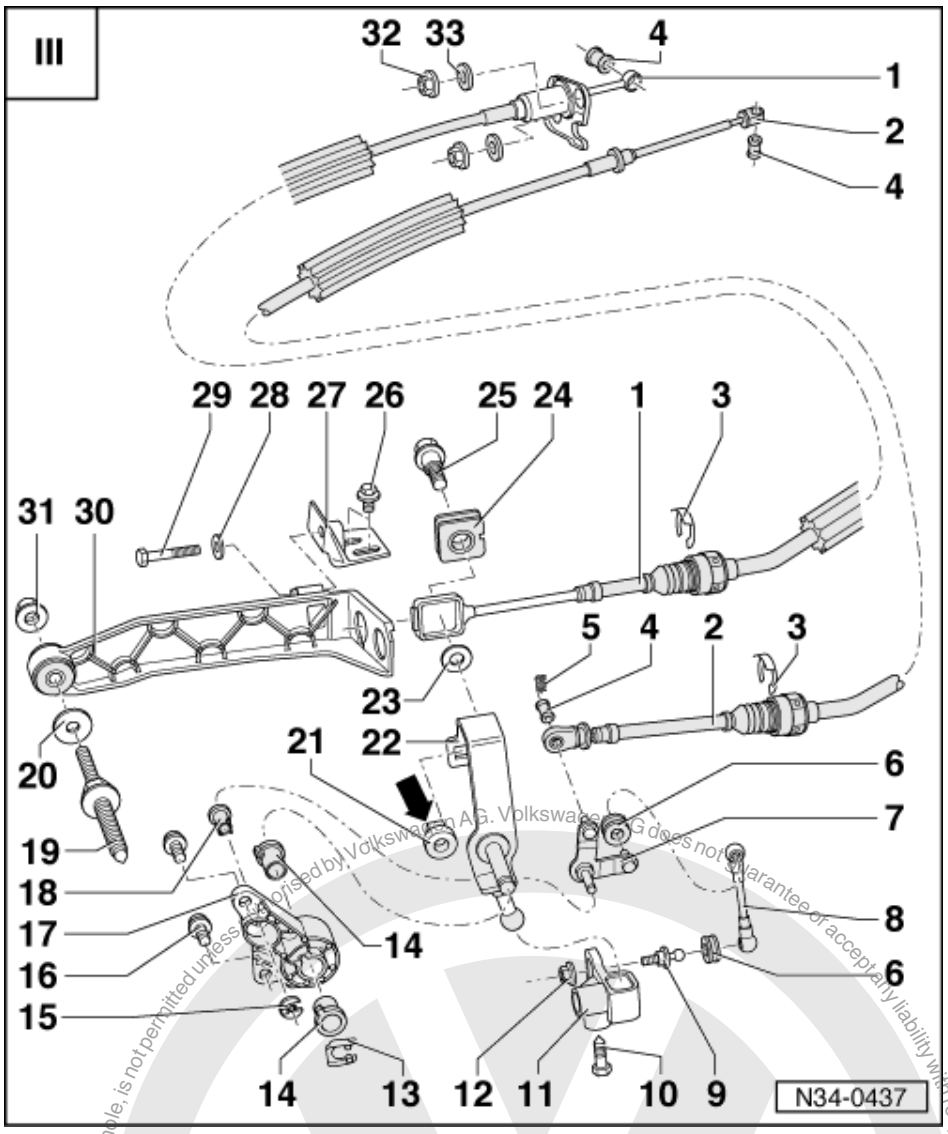


28 Washer
29 Hexagon bolt, 20 Nm
30 Support bracket
- Installation position => Page 68

31 Hexagon nut, 20 Nm
32 Self-locking hexagon nut, 15 Nm
- For selector cable to selector housing

33 Rubber washer

Protected by copyright. Copying for private or commercial purposes, in part or in whole, is not permitted unless authorised by Volkswagen AG. Volkswagen AG does not guarantee or accept any liability with respect to the correctness of information in this document. Copyright by Volkswagen AG.
satelettronica

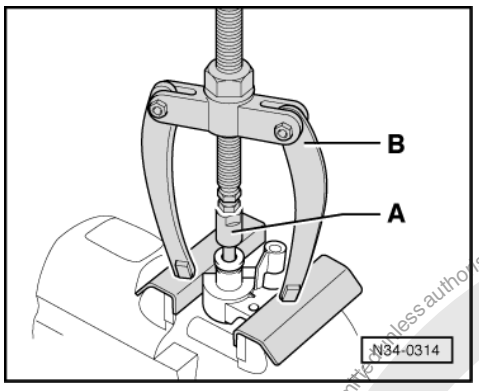


-> Fig.1 Pulling bush for gear stick lever out

A - Internal extractor 14 ... 19 mm, e.g. Kukko 21/2

B - Counter support, e.g. Kukko 22/2

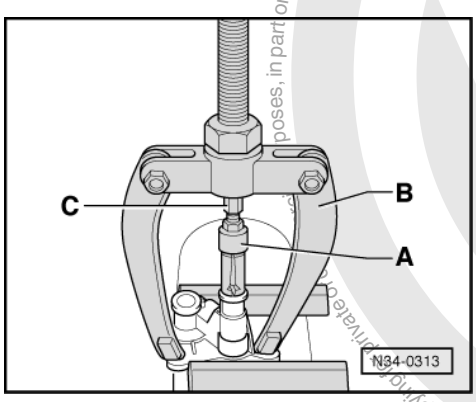


-> Fig.2 Pulling bush for relay lever out

A - Internal extractor 8 ... 12 mm, e.g. Kukko 21/01

B - Counter support, e.g. Kukko 22/2

C - Adapter from counter support Kukko 22/1

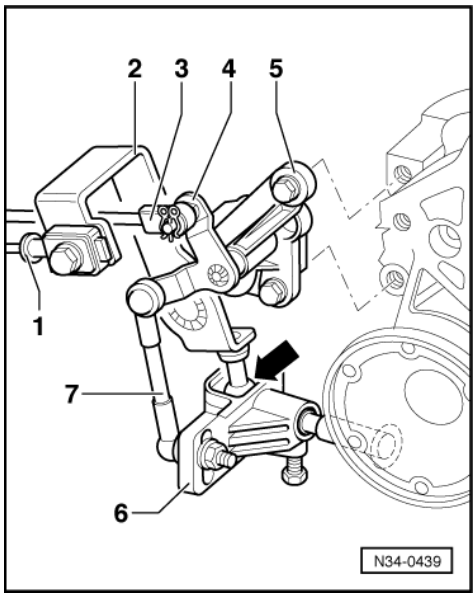


Protected by copyright. Copying for private or commercial purposes, in part or in whole, is not permitted unless authorised by Volkswagen AG. Volkswagen AG does not guarantee or accept any liability with respect to the correctness of information in this document. Copyright by Volkswagen AG.
satelettronica

-> Fig.3 Gear change lever, relay lever, selector finger installation position

1 - Gear change cable
2 - Gear change lever
is inserted into selector finger (arrow)
3 - Gate change cable
4 - Relay lever
5 - Mounting bracket
6 - Selector finger
7 - Gate rod

*Note:*

*For ease of illustration the support bracket for gear change cable and gate change cable is not shown.*

## 2.7 - Removing and installing gear selector mechanism

Removing operating cable with gear stick housing and support bracket.

Removing

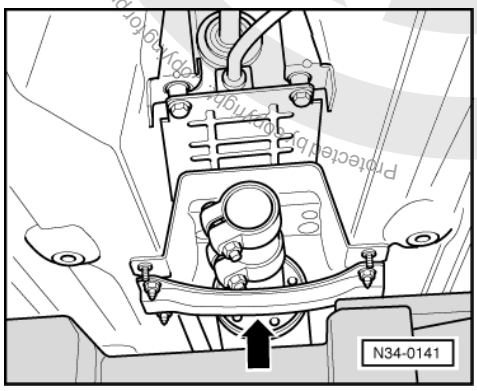


- Remove gear stick knob with gaiter and remove securing nuts for centre console on gear stick housing =>Page 60 .

- Separate front exhaust pipe at catalyst.

=> Repair group 26; Removing and installing parts of exhaust system. Removing and installing parts of exhaust system.

- -> Remove front (arrow) and rear cross supports, below the exhaust system.
- Remove front and rear heat shields.

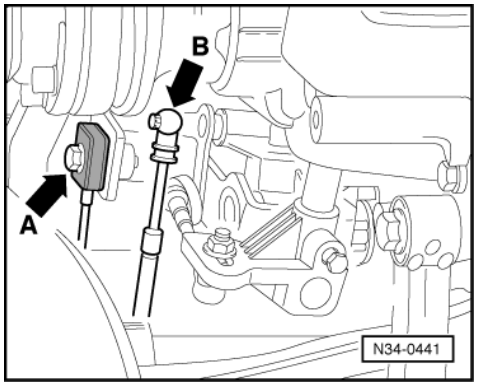


- -> Remove gear change cable (arrow A) and gate change cable (arrow B)



satelettronica

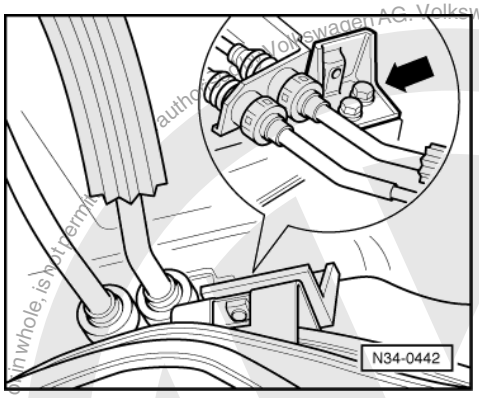


-> Remove angle piece (arrows) for support bracket from assembly carrier.

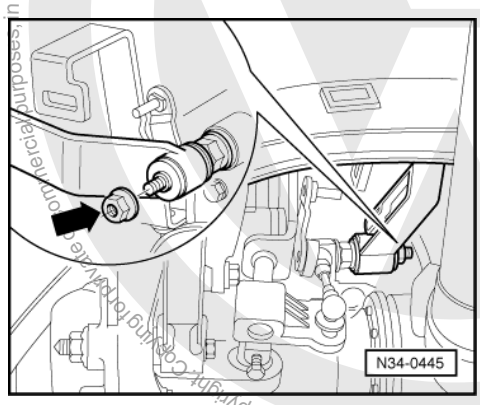


- -> Remove nut (arrow) for support bracket and pull off support bracket.

*Note:*

- Push exhaust system to right when pulling off support bracket.

- Unbolt gear stick housing from body.
- Take out operating cables with gear stick housing and support bracket.

### Installing

Installation is carried out in the reverse sequence, when doing this note the following:

- Adjusting selector mechanism => Page 84 .

### Removing and installing gear stick lever and relay lever mounting bracket

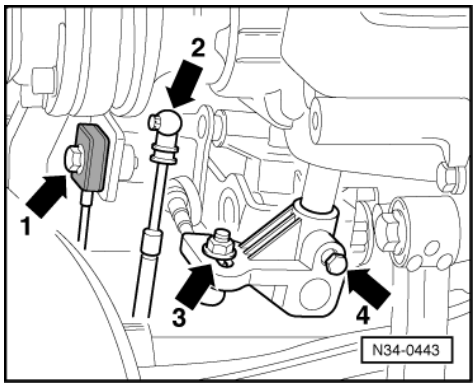


- -> Remove gear change cable (arrow 1) and gate change cable (arrow 2).
- Unscrew gate change rod with ball head (arrow 3) from selector finger.

Volkswagen AG. Volkswagen AG does not guarantee or accept any liability with respect to the correctness of information in this document. Copyright by Volkswagen AG.
Protected by copyright. Copying for private or commercial purposes, in part or in whole, is not permitted unless authorized by Volkswagen AG.
satelettronica

- Remove selector finger by loosening bolt (arrow 4).

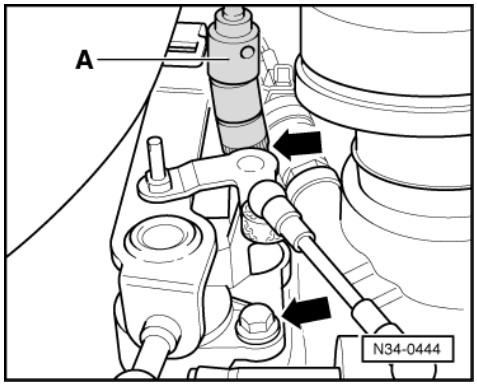


- -> Unscrew mounting bracket from gearbox (arrows).

  A = Commercially available 13 mm AF, 3/8" square drive deep socket and universal joint.

**Installing**

Installation is carried out in the reverse sequence, when doing this note the following:

- Adjusting selector mechanism => Page 84 .

## 2.8 - Adjusting gear selector mechanism (cable control gear selection)

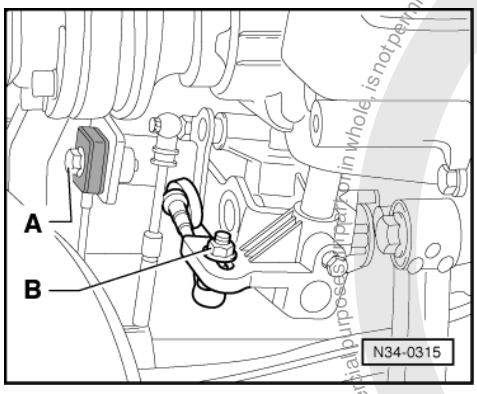


Gearbox in neutral.

- Pull gear stick knob off with gaiter =>Page 60 .
- Remove insulation tray below engine/gearbox, if fitted.
- -> Loosen bolt -A- and nut -B-, until the gear change cable and relay lever ball head/gate change cable are free to move in the elongated holes.

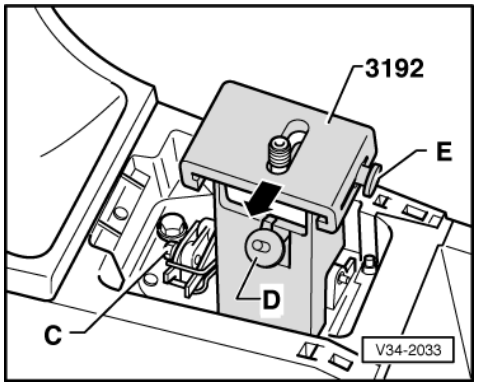


Protected by copyright. Copyright by Volkswagen AG.
Copyright by Volkswagen AG does not guarantee or accept any liability with respect to the correctness of information in this document.
Copying for private or commercial purposes, in part or in whole, is not permitted unless authorised by Volkswagen AG.
satelettronica

- -> Loosen bolt -C- .
- Insert gear stick jig.
- Swing jig securing hook under mounting plate and tighten nut -D-.
- Press gear stick into left-hand detent of sliding piece.
- Press gear stick together with sliding piece to left onto stop (direction of arrow) and tighten sliding piece with bolt -E-.

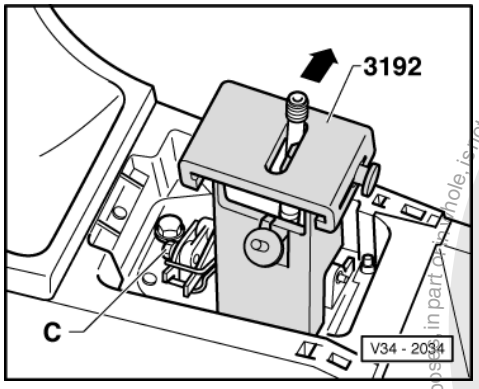


- -> Press gear stick into the right-hand detent (direction of arrow).
- Tighten bolt -C-.

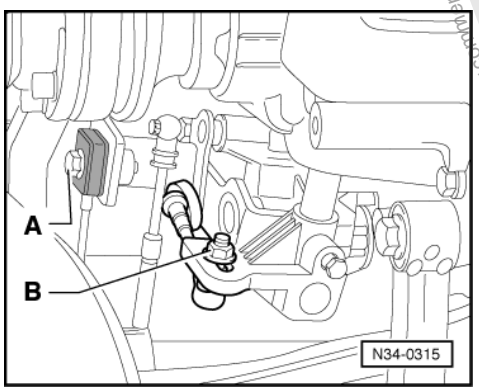


- -> Tighten bolt -A- and nut -B-.

*Note:*

- Do not move selector finger and ball head when tightening.

- Remove gear stick jig.

Functional check

• In neutral the gear stick must be in the 3rd/4th gear gate.

- Operate clutch.

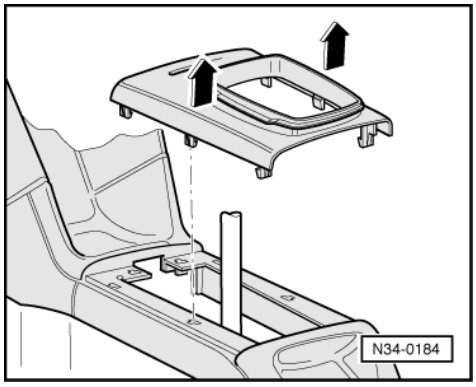


Protected by copyright. Copying for private or commercial purposes, in part or in whole, is not permitted unless authorised by Volkswagen AG. Volkswagen AG does not guarantee or accept any liability with respect to the correctness of information in this document. Copyright by Volkswagen AG.
satelettronica

- Select all gears several times. Pay particular attention to the operation of the reverse gear lock.

Should a gear fail to engage smoothly after repeated selection, then continue as follows:

- Pull gear stick knob off with gaiter =>Page 60 .
- -> Then pull the centre console cover, vertically upwards (arrows).
- Engage 1st gear.

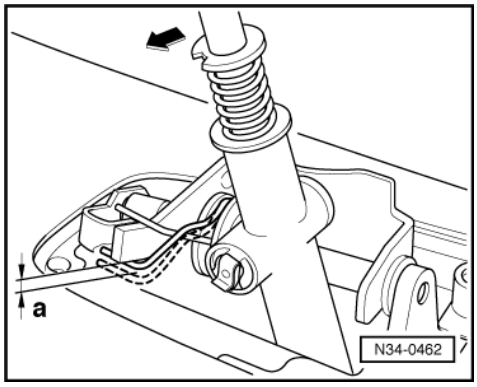


- Remove play from selector mechanism by carefully pushing gear stick to the left.
- Then press gear stick firmly to left onto stop (direction of arrow).

-> This additional movement moves the lower end of spring back distance -a-

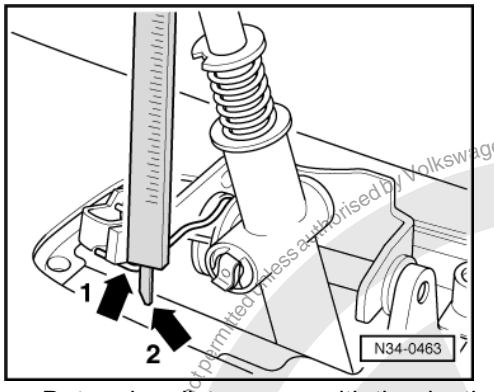


- Determine distance -a- with the depth gauge of a vernier caliper.
- -> Do this by laying vernier gauge horizontally on spring (arrow 1).
- Measure distance of spring (arrow 1) to bearing plate (arrow 3) to beginning and end of additional movement in each case.

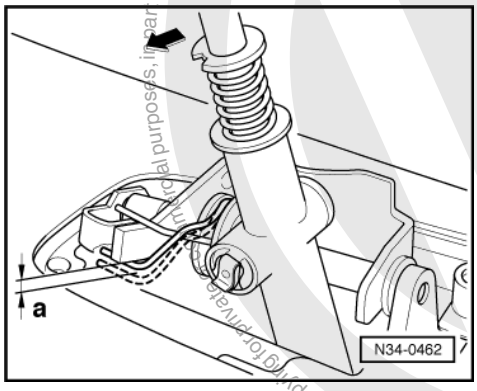


- -> Distance -a- must be 1...3 mm.
- If this is not the case, adjust selector mechanism =>Page 34-20.

Protected by copyright. Copying for private or commercial purposes, in part or in whole, is not permitted unless authorised by Volkswagen AG. Volkswagen AG does not guarantee or accept any liability with respect to the correctness of information in this document. Copyright by Volkswagen AG.
satelettronica

*Note:*

- The measuring sequence is performed with the console installed (shown removed for ease of illustration) but without frame.

# 3 - Removing and installing gearbox

## 3.1 - Removing and installing gearbox

### Removing

*Note:*

*Different work sequences for vehicles with Diesel engine =>Page 91 .*

- Disconnect earth strap from battery

*Note:*

*Note radio coding for vehicles with coded radio.*

- Depress clutch pedal several times down onto stop.
- Tension clutch cable and detach from gearbox.

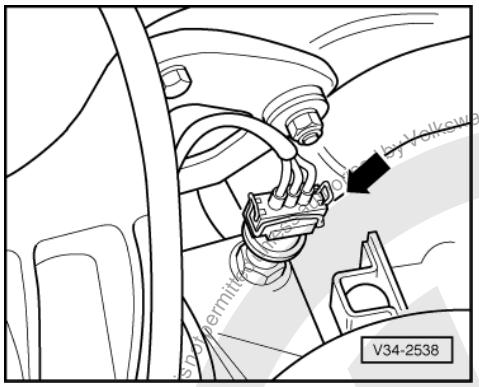


Up to 26.04.95 =>Page 27

From 27.04.95 =>Page 31

- -> Pull connector off road speed sender (arrow).

- Unbolt earth wire.
- Remove engine/gearbox upper securing bolts.
- Remove insulation tray below engine/gearbox, if fitted.

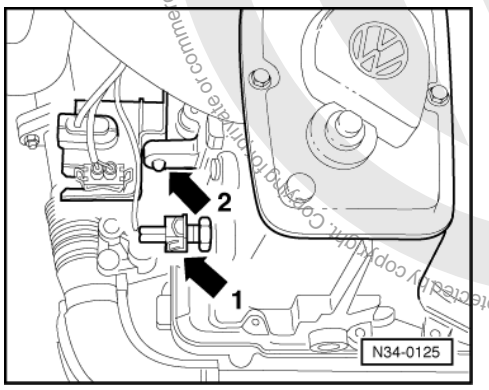


satelettronica
Copyright by Volkswagen AG. Volkswagen AG does not guarantee or accept any liability with respect to the correctness of information in this document. Copyright by Volkswagen AG.
Protected by copyright. Copying for private or commercial purposes, in part or in whole, is not permitted unless authorised by Volkswagen AG.

- -> Pull off reversing light connector (arrow 1).
- Unclip retainer for connector out of eye on gearbox (arrow 2)
- Disconnect drive shafts from flanged shafts, turn steering to full left lock.
- Tie-up left-hand drive shaft as high as possible.

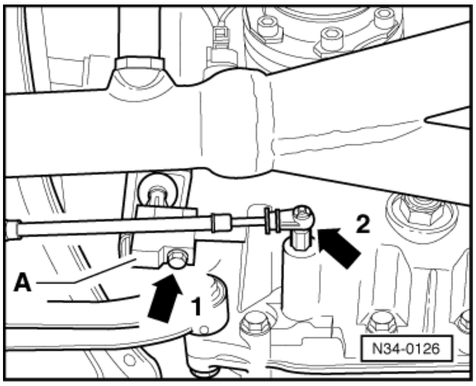


- -> Remove selector finger -A- by loosening bolt (arrow 1).
- Lever off cable circlip between selector lever and gearbox, at gearbox (arrow 2), if fitted.
- Lever off cable running between selector lever and gearbox, at gearbox (arrow 2).

Vehicles with cable selector control:

- Remove gear change cable and gate change cable from gearbox =>Page 82
- Remove support bracket =>Page 83

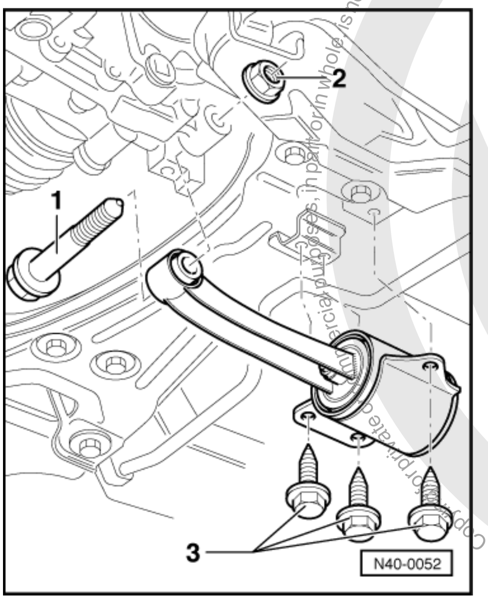


- Remove flywheel cover plate.
- -> Remove pendulum support, to do this remove bolts -3- and nut -2- and take out bolt -1-.

Protected by copyright. Copying for private or commercial purposes, in part or in whole, is not permitted unless authorised by Volkswagen AG. Volkswagen AG does not guarantee or accept any liability with respect to the correctness of information in this document. Copyright by Volkswagen AG.

sateletronica

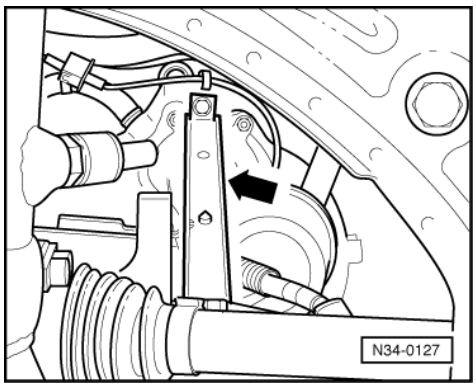


- -> Remove support for intake manifold, if fitted (arrow)
- Remove starter.

=> Repair group 27; Removing and installing starter. Removing and installing starter.

**For vehicles with an oval air cleaner:**

- Remove cover from air cleaner.

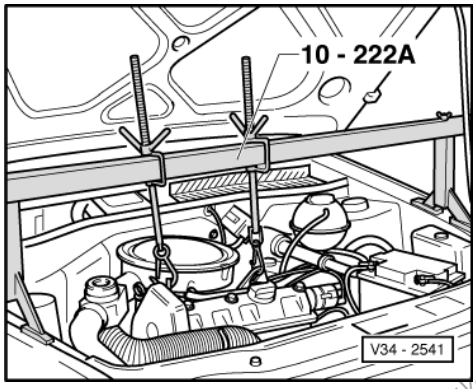


- -> Fit support bar 10-222A together with legs 10-222 A/1.
- Take weight of engine/gearbox assembly on the spindles.

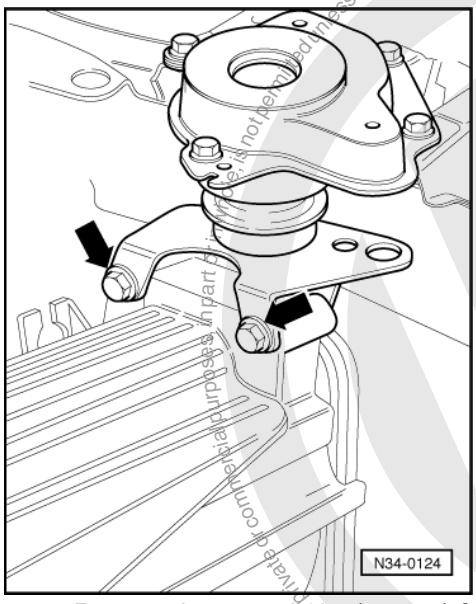


- -> Remove hexagon bolts (arrows) from left-hand gearbox mounting console.
- Carefully tilt engine and gearbox. To do this lower left-hand spindle slightly on support bar 10-222 A.

satelettronica
Protected by copyright. Copyright by Volkswagen AG. Volkswagen AG does not guarantee or accept any liability with respect to the correctness of information in this document. Copyright by Volkswagen AG.

Vehicles with petrol engine and rod selector mechanism

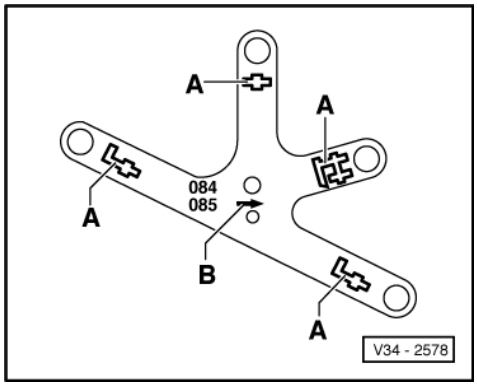


- -> Use adjusting plate 3282/6 to align gearbox support 3282.
- Place adjustment plate 3282/6 on gearbox support 3282. (Adjustment plate only fits in one position).
- Align arms of gearbox support according to holes in adjustment plate.
- Bolt on support elements -A-, as illustrated on adjustment plate.

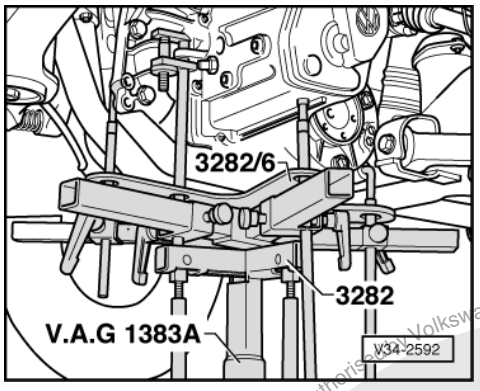


- -> Place gearbox jack under vehicle, arrow symbol -B- (=> Illustration V34-2578) on adjustment plate points to front of vehicle.
- Align adjustment plate parallel to gearbox and lock safety supports on gearbox.

Vehicles with petrol engine and cable selector mechanism

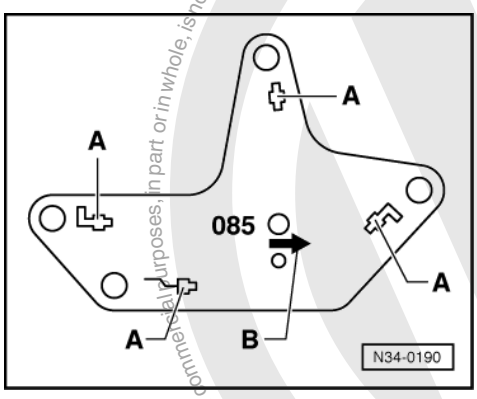


- -> Use adjusting plate 3282/20 to align gearbox support 3282.
- Place adjustment plate 3282/20 on gearbox support 3282. (Adjustment plate only fits in one position).
- Align arms of gearbox support according to holes in adjustment plate.
- Bolt on support elements -A-, as illustrated on adjustment plate.

Protected by copyright. Copyright by Volkswagen AG.
Copyright by Volkswagen AG. Volkswagen AG does not guarantee or accept any liability with respect to the correctness of information in this document. Copying for private or commercial purposes, in part or in whole, is not permitted unless authorised by Volkswagen AG.
satelettronica

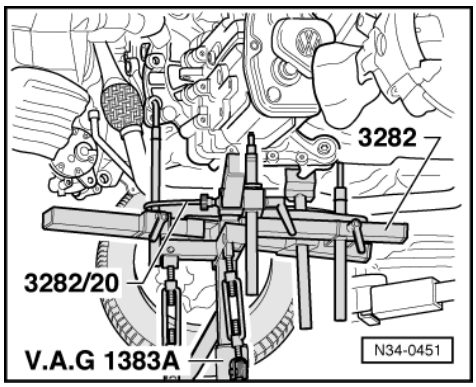


- -> Place gearbox jack under vehicle, arrow symbol -B- (=> Illustration N 34-0190) on adjustment plate points to front of vehicle.

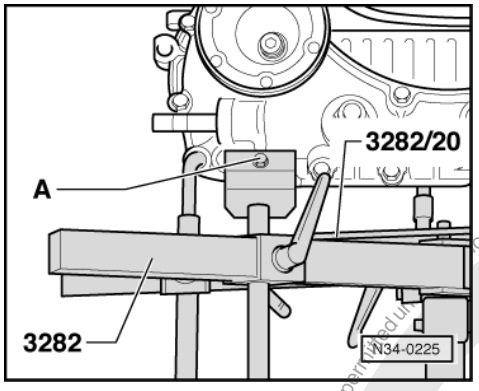


- -> Secure gearbox to gearbox support 3282 with bolt -A-

Continuation for all vehicles

- Remove lower engine/gearbox securing bolts.
- Press gearbox off dowels and lower carefully.

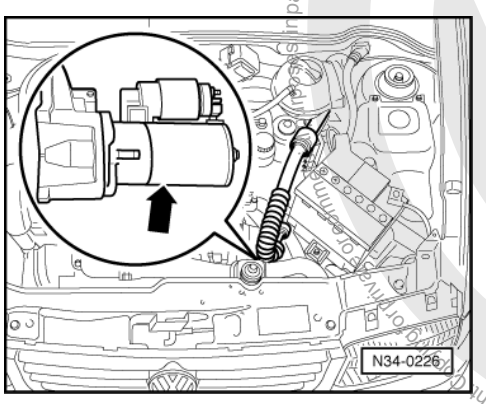


Vehicles with Diesel engine, note different work sequence:

-> The starter is fitted in front of gearbox (arrow).

- If fitted remove the insulation tray below engine/gearbox before removing starter.
- Remove starter.

=> Repair group 27; Removing and installing starter. Removing and installing starter.

satelettronica
Protected by copyright. Copying for private or commercial purposes, in part or in whole, is not permitted unless authorised by Volkswagen AG. Volkswagen AG does not guarantee or accept any liability with respect to the correctness of information in this document. Copyright by Volkswagen AG.

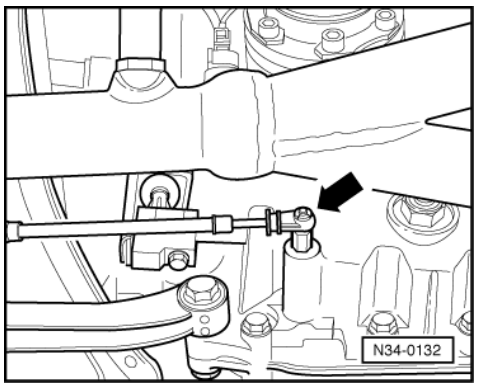


- -> Unscrew pin (arrow) for cable between gear change mechanism and gearbox.

The pin hole is required to secure gearbox to gearbox mounting 3282 =>Page 91 .

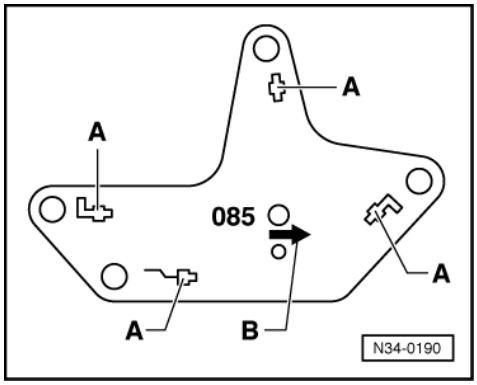


- Use adjusting plate 3282/20 to align gearbox support 3882.
- Place adjustment plate 3282/20 on gearbox support 3282. (Adjustment plate only fits in one position).
- Align arms of gearbox support according to holes in adjustment plate.
- -> Bolt on support elements -A-, as illustrated, on adjustment plate.

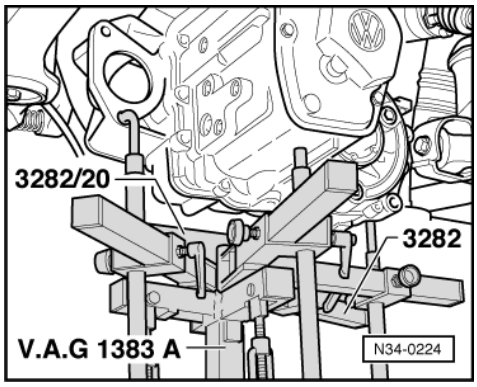


- -> Place gearbox jack under vehicle, arrow symbol -B- (=> Illustration N 34-0190) on adjustment plate points to front of vehicle.
- Align adjustment plate parallel to gearbox.

Protected by copyright. Copying for private or commercial purposes, in part or in whole, is not permitted unless authorised by Volkswagen AG. Volkswagen AG does not guarantee or accept any liability with respect to the correctness of information in this document. Copyright by Volkswagen AG.
satelettronica

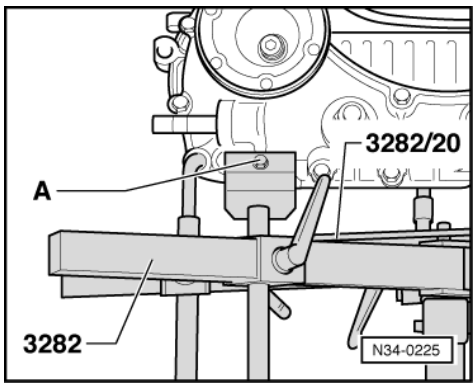


- -> Secure gearbox to gearbox support 3282 with bolt -A-

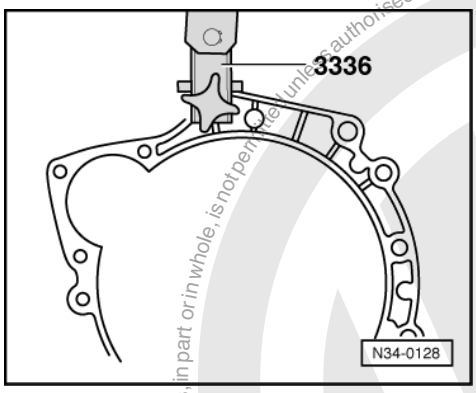


### Transporting the automatic gearbox

Special tool 3336 may be used to transport the gearbox and also when setting up gearbox mounting 3282.

- -> Bolt gearbox lifting device 3336 to clutch housing.

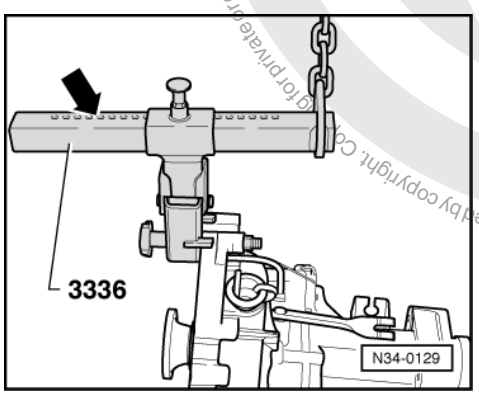


- -> Set support beam on sliding piece with locking pin (arrow).

No. of holes visible = 9

- Take gearbox out with workshop crane and gearbox lifting device 3336.

### Installing

***Note:***

*Modifications on vehicles with Diesel engine =>Page 100 .*

- Clean input shaft splines and lightly grease with G000 100 grease.

Protected by copyright. Copyright by Volkswagen AG. Volkswagen AG does not guarantee or accept any liability with respect to the correctness of information in this document. Copyright by Volkswagen AG.
satelettronica

The clutch plate must be able to slide lightly to and fro on the input shaft.

- Check whether dowel sleeves for aligning engine/gearbox are fitted in cylinder block, install if necessary.
- Ensure that the intermediate plate is correctly positioned on engine.

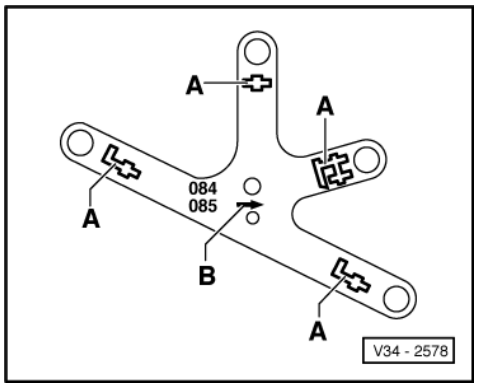


- Assemble gearbox jack with gearbox support 3282, adjustment plate 3282/6 for "084", "085" gearbox and support elements as follows:
- Place adjustment plate 3282/6 on gearbox support 3282. (Adjustment plate only fits in one position).
- Align arms of gearbox support according to holes in adjustment plate.
- -> Bolt on support elements -A-, as illustrated, on adjustment plate.
- Place gearbox on gearbox jack.

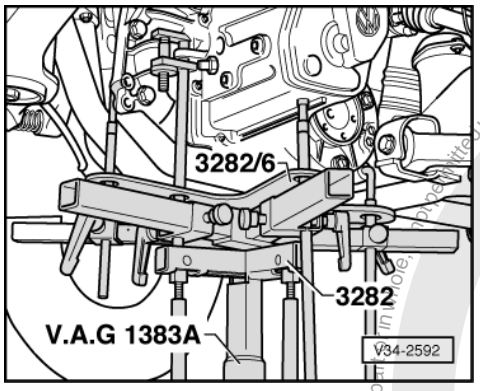


- Align adjustment plate and gearbox parallel with one another and lock safety supports on gearbox.
- -> Place gearbox jack under vehicle, arrow symbol -B- (=> Illustration V34-2578 on previous page) on adjustment plate points to front of vehicle.
- Insert gearbox.
- Install lower engine/gearbox securing bolts.

Protected by copyright. Copying for private or commercial purposes, in whole or in part, is not permitted unless authorised by Volkswagen AG. Volkswagen AG does not guarantee or accept any liability with respect to the correctness of information in this document. Copyright by Volkswagen AG.
satelettronica

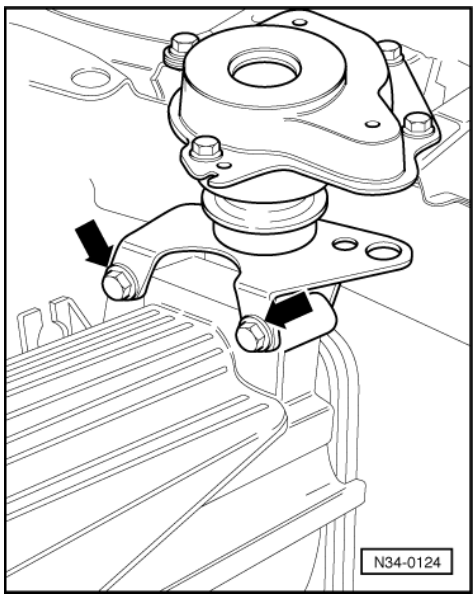


- Align engine/gearbox in installation position. To do this tighten the left-hand spindle on support bar 10-222 A.
- -> Insert left-hand gearbox console hexagon bolts (arrows) and tighten to torque setting.
- Remove support bar 10-222A.

Warning!
Do not remove support bar 10-222A until the bolts securing the left-hand gearbox console have been tightened to torque setting.

- Install upper engine/gearbox securing bolts.

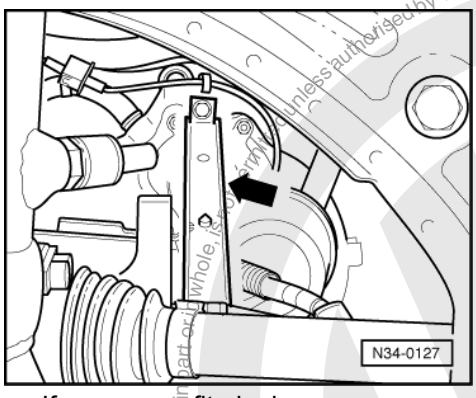


- If necessary fit air cleaner cover.
- Install starter.

=> Repair group 27; Removing and installing starter. Removing and installing starter.

- -> Install support for intake manifold (arrow)

Protected by copyright. Copying for private or commercial purposes, in part or in whole, is not permitted unless authorised by Volkswagen AG. Volkswagen AG does not guarantee or accept any liability with respect to the correctness of information in this document. Copyright by Volkswagen AG.
satelettronica

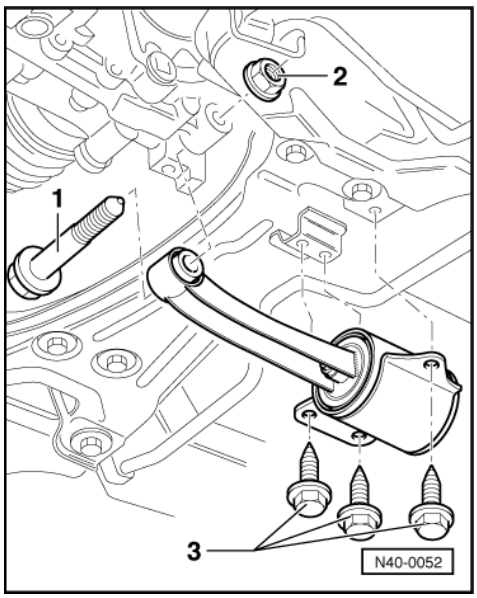


- -> Install pendulum support, to do this insert bolt -1- and install nut -2- and bolts -3-.

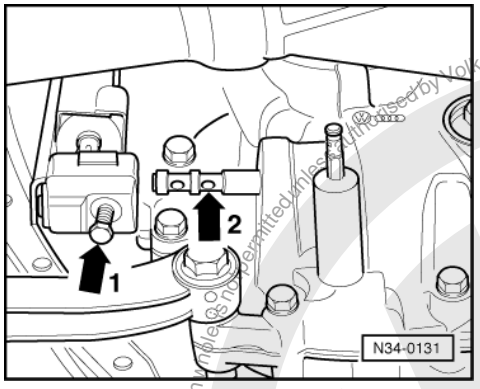


- Install flywheel cover plate.
- Clean threaded hole in selector finger with M8 tap.
- -> Always replace selector finger securing bolt (arrow 1). The bolt is to be pre-treated with locking fluid.
- Push selector finger onto inner selector finger so far as to allow the securing bolt (arrow 1) to fit into the forward recess on the selector lever (arrow 2).

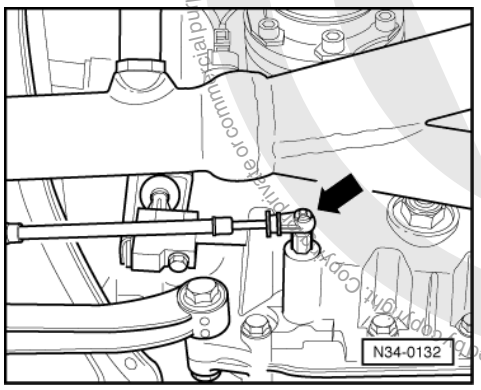


- Renew bush in cable between selector mechanism and gearbox (arrow).
- -> Press cable, running between selector mechanism and gearbox, on at gearbox (arrow).
- Fit circlip for cable running between selector lever and gearbox, at gearbox, if fitted.

**Vehicles with cable selector control:**

- Install gear change cable and gate change cable to gearbox =>Page 82

Protected by copyright. Copyright by Volkswagen AG. Volkswagen AG does not guarantee or accept any liability with respect to the correctness of information in this document. Copyright by Volkswagen AG. Copying for commercial purposes, distribution, display or making available to others is not permitted unless authorised by Volkswagen AG.
satelettronica

- Install support bracket =>Page 83

- Fit drive shafts to flange shafts.

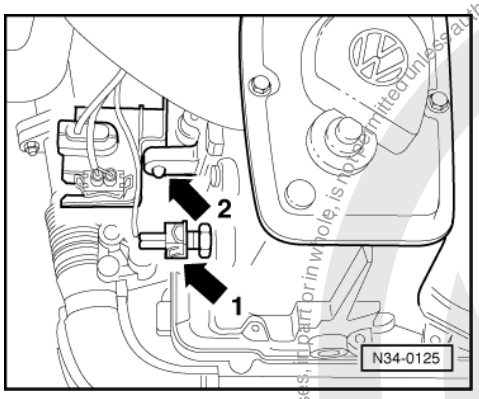


- -> Clip retainer for connectors into eye on gearbox (arrow 2).
- Reconnect reverse light connector (arrow 1).
- Install insulation tray below engine/gearbox, if fitted.
- Install upper engine/gearbox securing bolts.
- Bolt on earth wire.

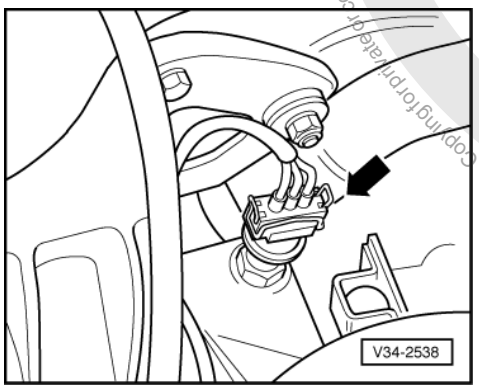


- -> Reconnect speedometer sender connector (arrow).

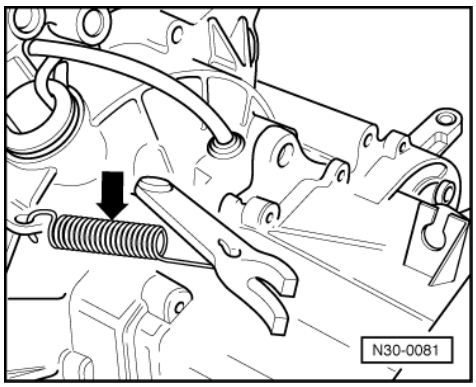


*Notes:*

- -> The spring (arrow) if fitted between release lever and gearbox must be unconditionally removed, otherwise the function of the clutch cable adjustment mechanism cannot be guaranteed!
- The spring is only required for securing the release bearing during transport.

- Install clutch cable to gearbox.

Up to 26.04.95 =>from Page 29

Protected by copyright. Copying for private and commercial purposes, in part or in whole, is not permitted unless authorised by Volkswagen AG. Volkswagen AG does not guarantee or accept any liability with respect to the correctness of information in this document. Copyright by Volkswagen AG.
satelettronica

From 27.04.95 =>from Page 33

- Reconnect earth strap to battery.

***Note:***

*Note radio coding for vehicles with coded radio.*

- Checking gearbox oil =>Page 102 .
- Adjusting selector mechanism:

Rod selector mechanism => Page 64 .

Cable selector mechanism => Page 84

**Tightening torques**

Gearbox to engine

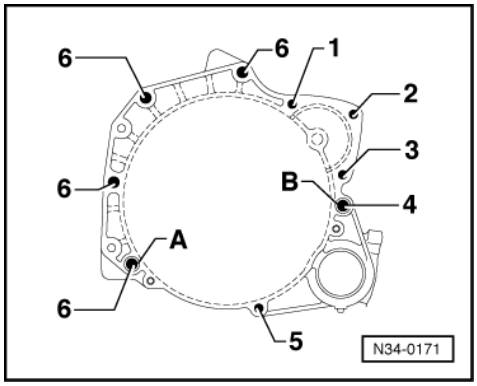


-> Engine block of cast iron (painted black)

| Item | Bolt | Qty. | Nm |
|---|---|---|---|
| 1 | M 8 x 65 | 1 | 20 |
| 2 | M 8 x 70 | 1 | 20 |
| 3 | M 8 x 160 | 1 | 20 |
| 4 | M 12 x 62 | 1 | 80 |
| 5 | M 7 x 12 | 1 | 15 |
| 6 | M 12 x 70 | 4 | 80 |

Items A + B - Dowel sleeves

Gearbox to engine

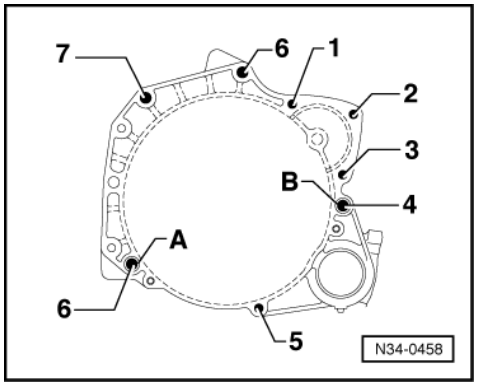


Protected by copyright. Copying for private or commercial purposes, in part or in whole, is not permitted unless authorised by Volkswagen AG. Volkswagen AG does not guarantee or accept any liability with respect to the correctness of information in this document. Copyright by Volkswagen AG.
satelettronica

-> Engine block of aluminium (metallic brilliant)

| Item | Bolt | Qty. | Nm |
|---|---|---|---|
| 1 | M 8 x 65 | 1 | 20 |
| 2 | M 8 x 70 | 1 | 20 |
| 3 | M 8 x 160 | 1 | 20 |
| 4 | M12 x 80 | 1 | 80 |
| 51) | M 7 x 12 | 1 | 15 |
| 6 | M12 x 80 | 2 | 80 |
| 7 | M12 x 80 | 1 | 80 |

1) Flywheel shield securing bolts

Items A + B - Dowel sleeves

Assembly mountings

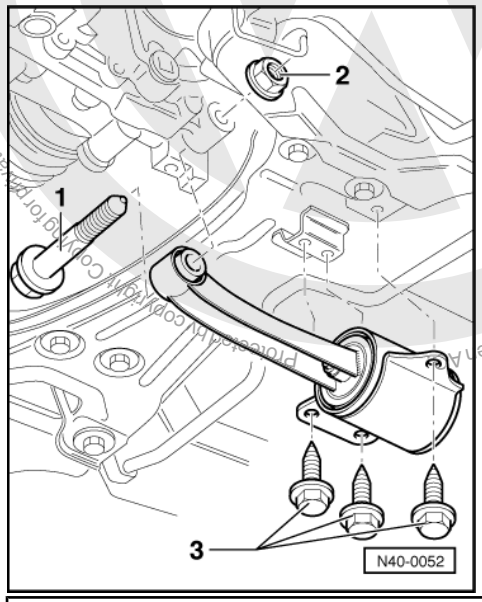


| Pendulum support | Nm |
|---|---|
| 1)Nut -2- on bolt -1- | 50 |
| Hexagon bolts -3-, M8 x 20; strength class 8.1 | 30 |

- 1) Tighten nut to tightening torque. Counterhold bolt so that the rubber bush is not stressed/turned

**Modification from 12.96**

**From vehicle identification No.: 6N ZVW 133102**

modified hexagon bolts -3- have been introduced.

Hexagon bolts -3-, M8 x 22; strength class 9.1
Tightening torque; 20 Nm and turn 90° further
Renew hexagon bolts after each removal

satelettronica

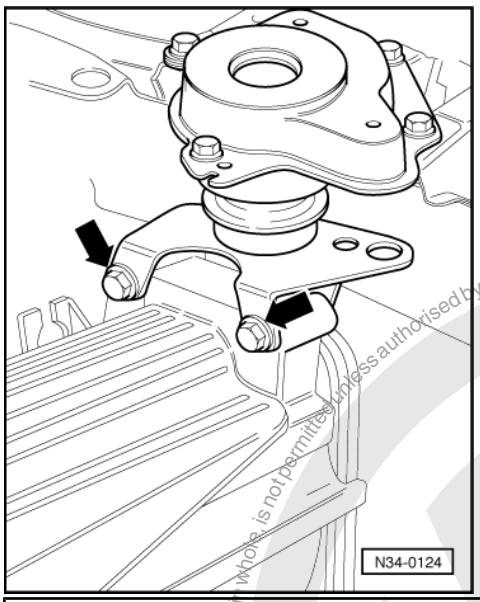


| | |
|---|---|
| Left-hand gearbox console to gearbox (arrows) | 50 Nm-> |

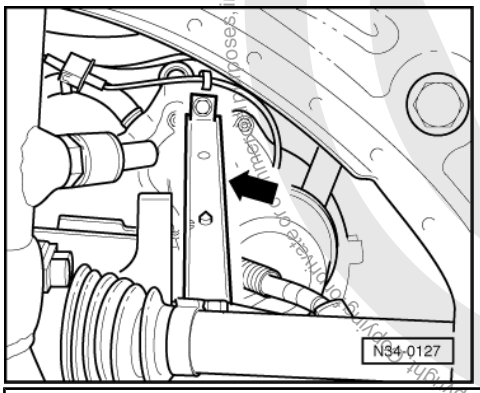


| | |
|---|---|
| Support for intake manifold | 25 Nm-> |
| Drive shaft to flange shaft | 45 Nm |
| Selector finger to gearbox | 20 Nm |

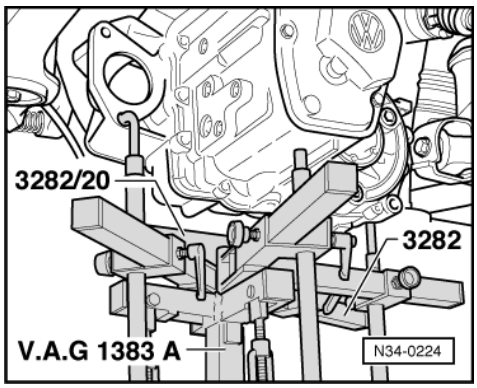


**The following modifications should be noted on vehicles with Diesel engine:**

- -> Use the new adjusting plate 3282/20 to align the gearbox support 3882.

Copyright by Volkswagen AG. Volkswagen AG does not guarantee or accept any liability with respect to the correctness of information in this document. Copyright by Volkswagen AG. Reproduced by copyright holders. Distribution or other use of this information, in part or whole, is not permitted unless authorised by Volkswagen AG.
satelettronica

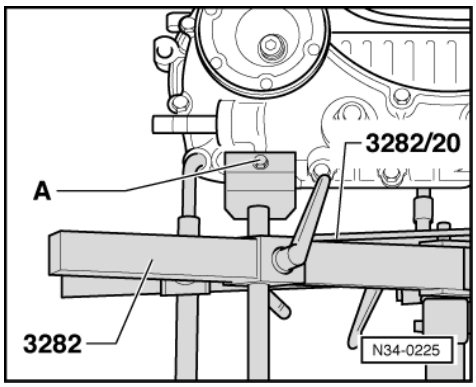


- -> Remove bolt -A- after gearbox is bolted to engine.

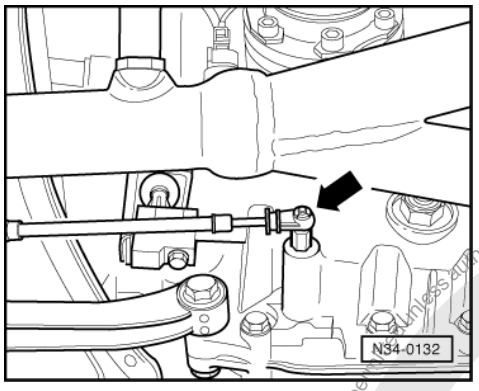


- -> For rod selector mechanism, screw pin (arrow) for selector mechanism cable into threaded hole.

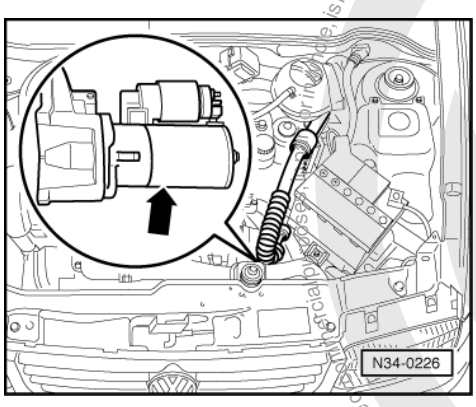


-> Install starter (arrow) before installing gearbox.
=> Repair group 27; Removing and installing starter. Removing and installing starter.
**The clutch housing flange and the securing bolts have been matched to the Diesel engine.**
**Tightening torques**

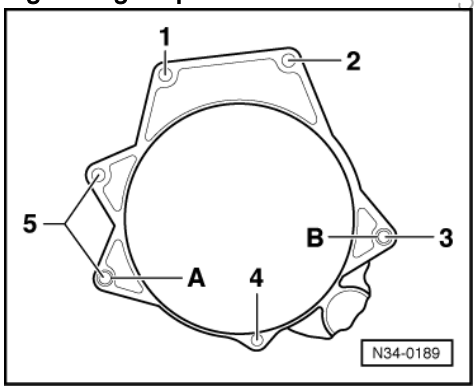


Protected by copyright. Copyright by Volkswagen AG.
Copyright by Volkswagen AG. Volkswagen AG does not guarantee or accept any liability with respect to the correctness of information in this document. Copying for private or commercial purposes, in part or in whole, is not permitted unless authorised by Volkswagen AG.
satelettronica

-> Gearbox to engine

| Item | Bolt | Qty. | Nm |
|---|---|---|---|
| 1 | M12 x 55 | 1 | 80 |
| 2 | M12 x 70 | 1 | 80 |
| 3 | M12 x 62 | 1 | 80 |
| 41) | M 7 x 12 | 1 | 10 |
| 52) | M10 x 150 | 2 | 60 |

1) Flywheel shield securing bolts

2) Also starter to gearbox

Items A + B = Dowel sleeves

# 4 - Checking gear oil

## 4.1 - Checking gear oil

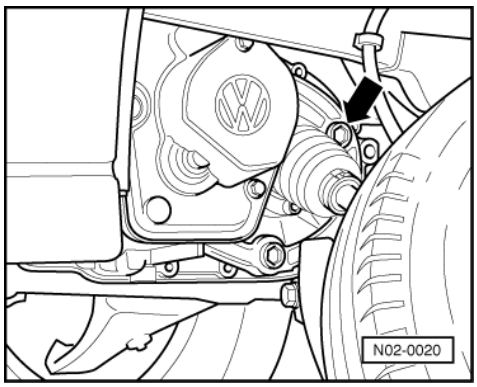


Gear oil specification => Page 2

**Gearboxes up to gearbox build date 22 10 5:**

- Turn steering onto full left lock
- -> Remove plug (arrow) for checking gearbox oil differential housing with e.g. 17 mm AF hexagon bit socket, universal joint, extension and T bar.

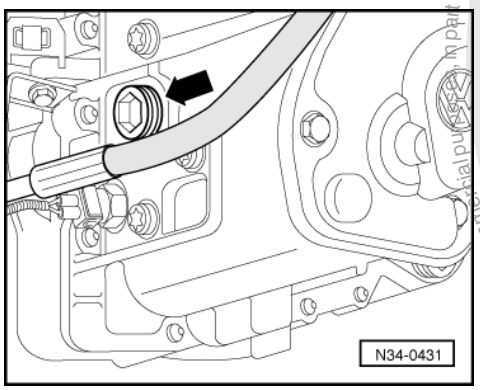


**Gearboxes from gearbox build date 23 10 5:**

- -> Remove plug (arrow) for checking gearbox oil from gearbox housing.

satelettronica
Copyright by Volkswagen AG. Volkswagen AG does not guarantee or accept any liability with respect to the correctness of information in this document. Copyright by Volkswagen AG. Reproduction, in part or in whole, is not permitted unless authorised by Volkswagen AG. Copying for private or commercial purposes, in part or in whole, is not permitted unless authorised by Volkswagen AG.

*Note:*

- For Diesel engine use e.g. 17 AF hexagon bit socket, universal joint, extension and T bar.

The oil level is correct when the gearbox is full to the lower edge of the filler hole.

- Fit plug (arrow).

**When filling with new oil note following:**

- Remove plug (arrow).
- Top up oil to lower edge of filler hole.
- Fit plug (arrow).

**Tightening torque**

| | |
|---|---|
| Oil filler plug | 25 Nm |

# 5 - Dismantling and assembling gearbox

## 5.1 - Dismantling and assembling gearbox

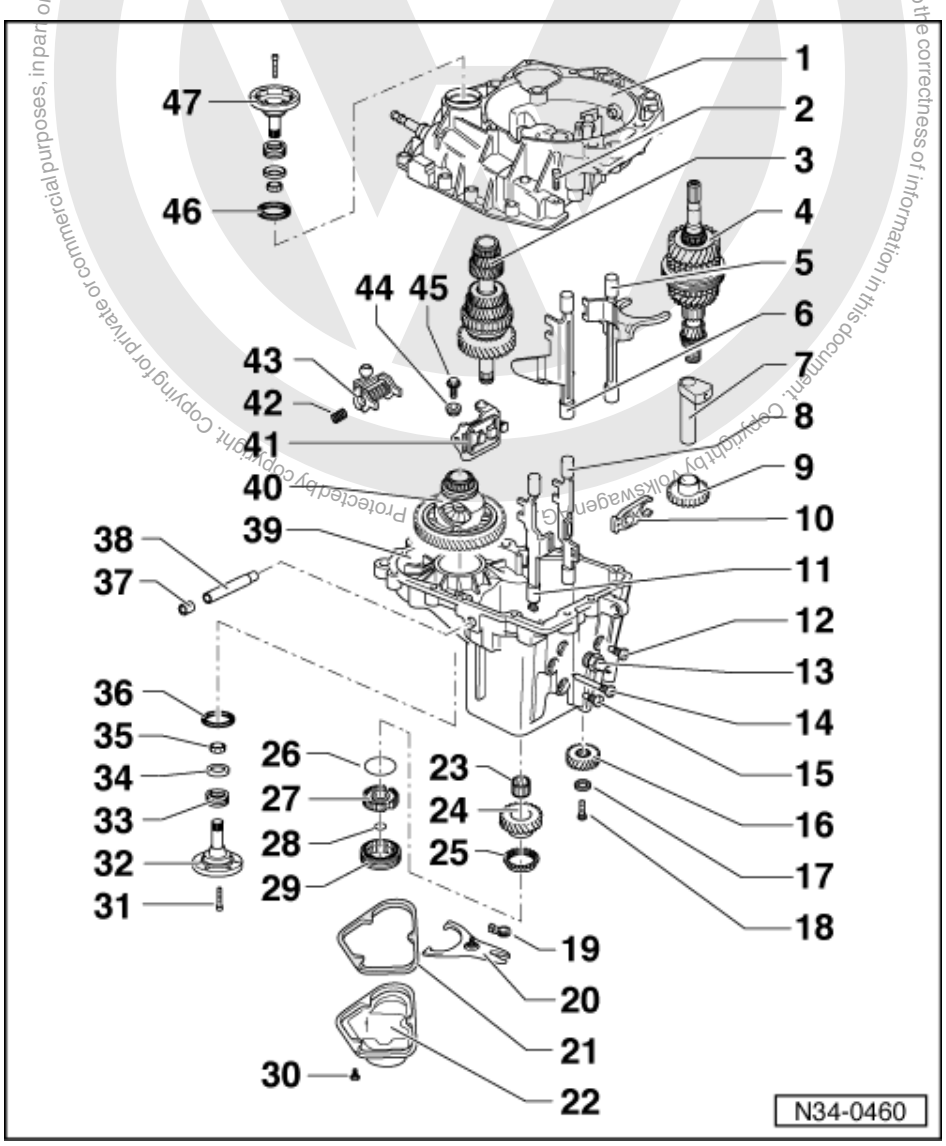


Copyright by Volkswagen AG. Volkswagen AG does not guarantee or accept any liability with respect to the correctness of information in this document. Copying for private or commercial purposes, in part or in whole, is not permitted unless authorised by Volkswagen AG. Protected by copyright.

satelettronica

Sequence for dismantling and assembling => Page 111

1 Clutch housing
- Servicing => page 125

2 Hexagon bolt, 25 Nm

3 Output shaft
- Dismantling and assembling => Page 148

4 Input shaft
- Dismantling and assembling => Page 136

5 Selector rod with selector fork for 3rd and 4th gear

6 Selector rod with selector fork for 1st and 2nd gear

7 Reverse gear shaft

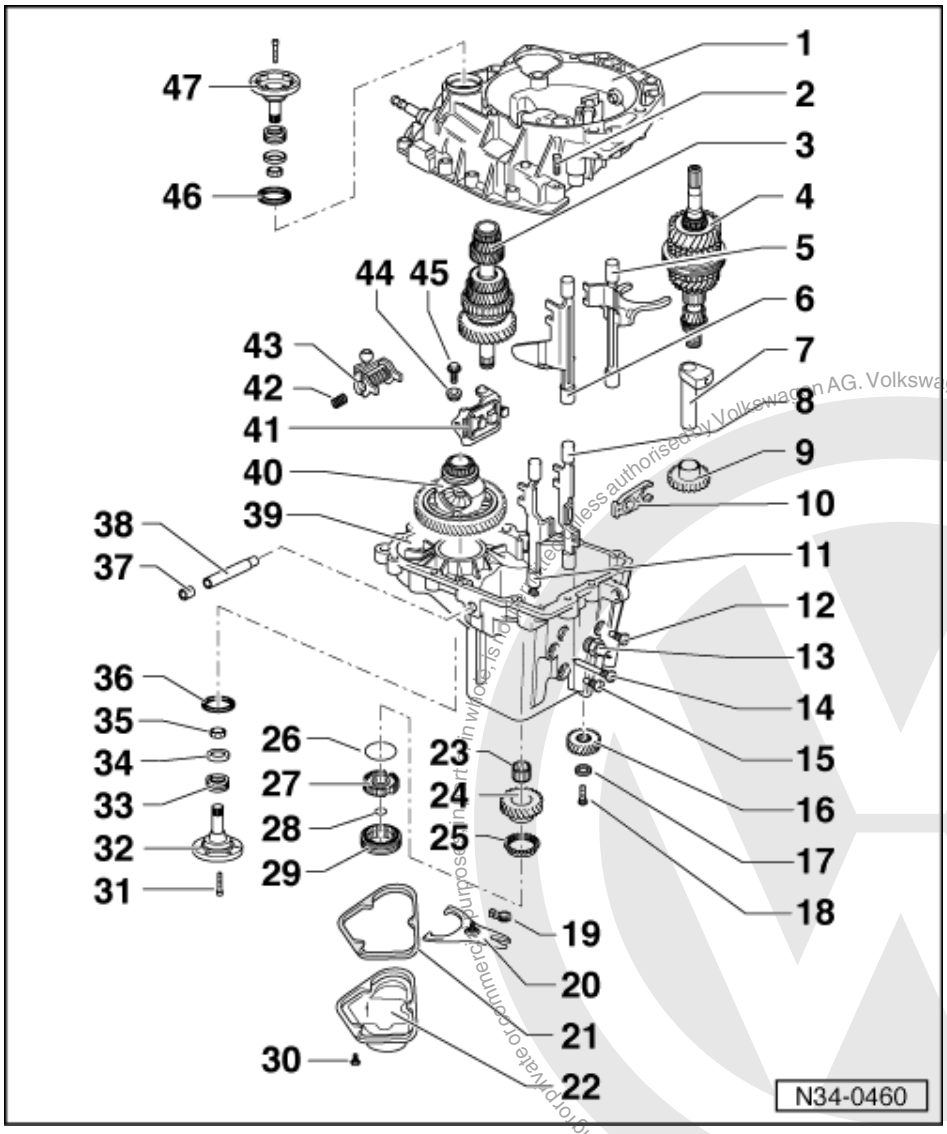


8 Selector rod for reverse gear

9 Reverse gear
- Insert with shaft

10 Reverse lever
- Insert with reverse gear selector rod

11 Selector rod
- For 5th gear

Protected by copyright. Copying for private or commercial purposes, in part or in whole, is not permitted unless authorised by Volkswagen AG. Volkswagen AG does not guarantee or accept any liability with respect to the correctness of information in this document. Copyright by Volkswagen AG.
satelettronica

12 Bolt, 35 Nm
- For reverse gear shaft

13 Reversing light switch, 20 Nm

14 Bolt, 35 Nm
- For 5th gear and reverse gear selector rods

15 Bolt, 35 Nm
- For reverse gear reverse lever

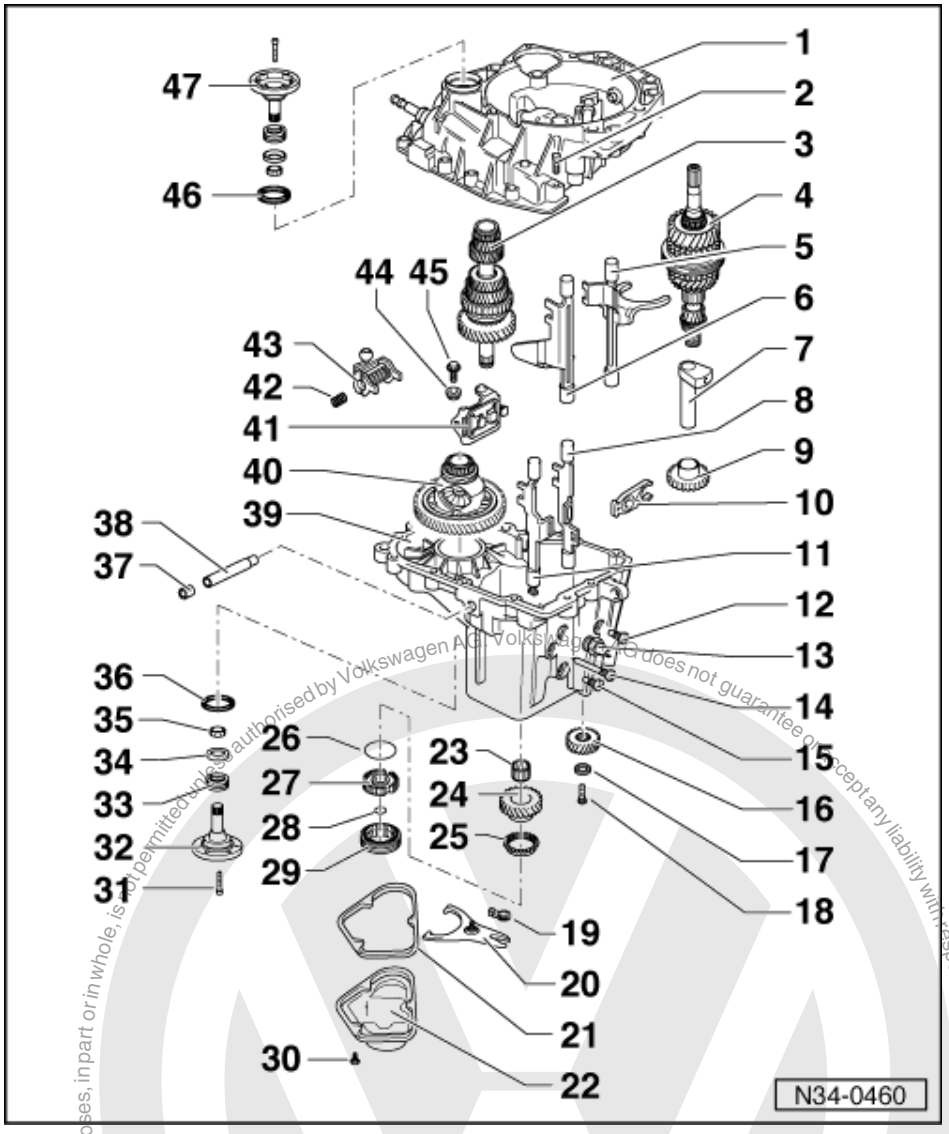


16 5th speed gear wheel

17 Dished spring
- Concave side faces to 5th gear

18 Bolt, 40 Nm
- Always renew

19 Clip

20 5th gear selector fork
- With ball head bolt M8x1

21 Gasket

22 Gearbox housing cover

23 Needle roller bearing
- For 5th gear

24 5th selector gear

satelettronica

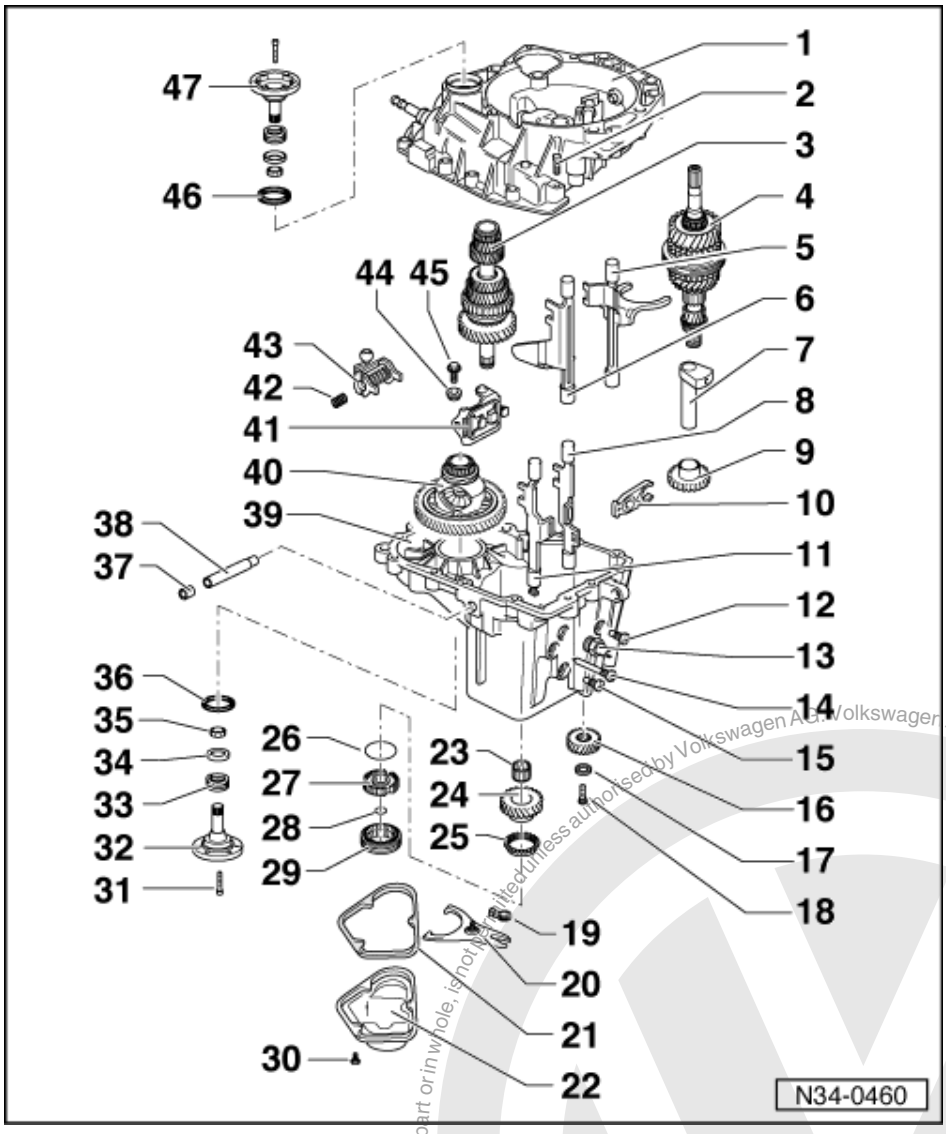


25 5th gear synchro-ring
- Locking pieces are on synchro-ring

26 Spring

27 5th gear synchro-hub

28 Circlip
- Always renew
- Determining thickness => Page 122

29 5th gear locking collar

30 Hexagon bolt, 10 Nm

31 Hexagon socket head bolt, 25 Nm

32 Left-hand flanged shaft
- Do not interchange, left and right-hand flanged shafts differ =>Page 121

33 Spring for flanged shaft

satelettronica
Protected by copyright. Copying for private or commercial purposes, in part or in whole, is not permitted unless authorised by Volkswagen AG. Volkswagen AG does not guarantee or accept any liability with respect to the correctness of information in this document. Copyright by Volkswagen AG.

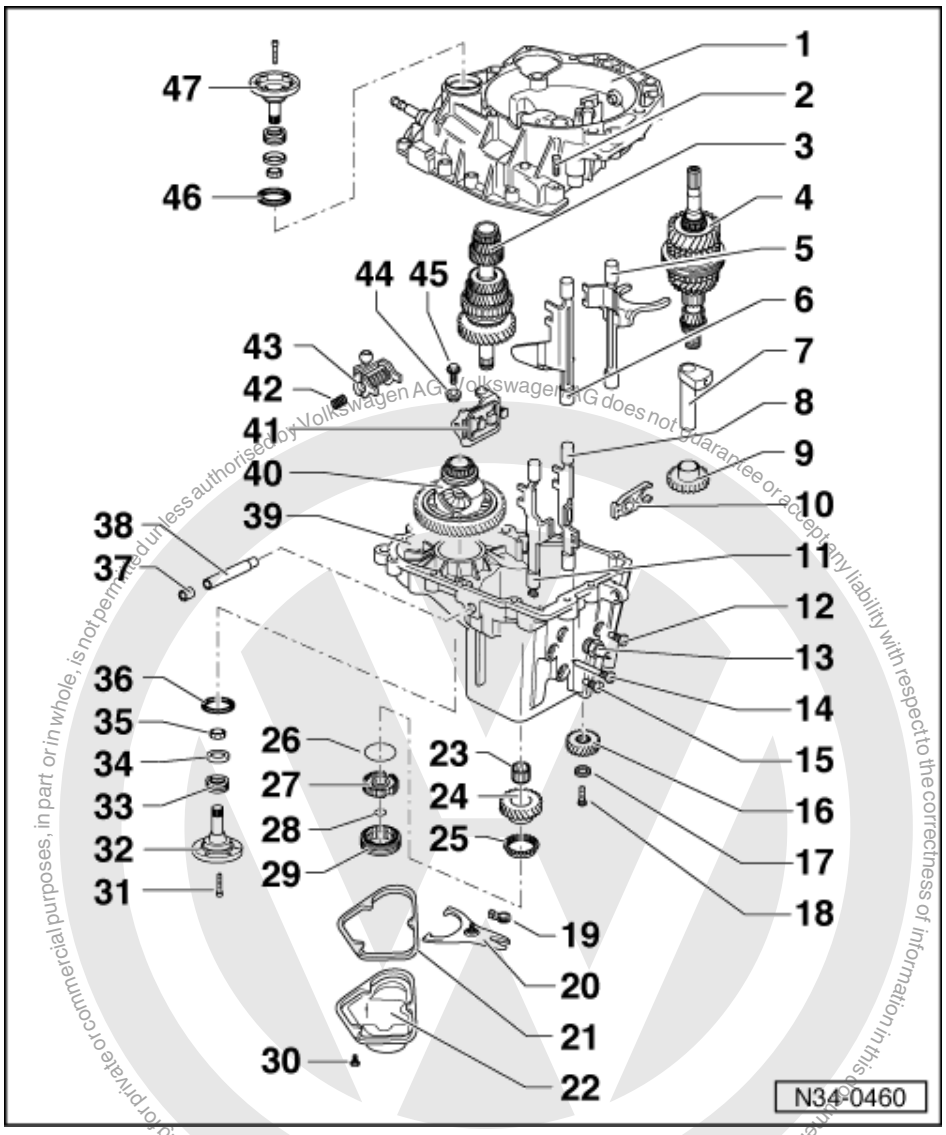


34 Thrust washer

35 Tapered ring

36 Oil seal

- For left-hand flanged shaft
- Left and right-hand diameters differ.
- Renewing with gearbox installed => Page 166

37 Plug

38 Selector shaft

Copyright by Volkswagen AG. Protected by copyright. Copying for private or commercial purposes, in part or in whole, is not permitted unless authorised by Volkswagen AG. Volkswagen AG does not guarantee or accept any liability with respect to the correctness of information in this document.
satelettronica

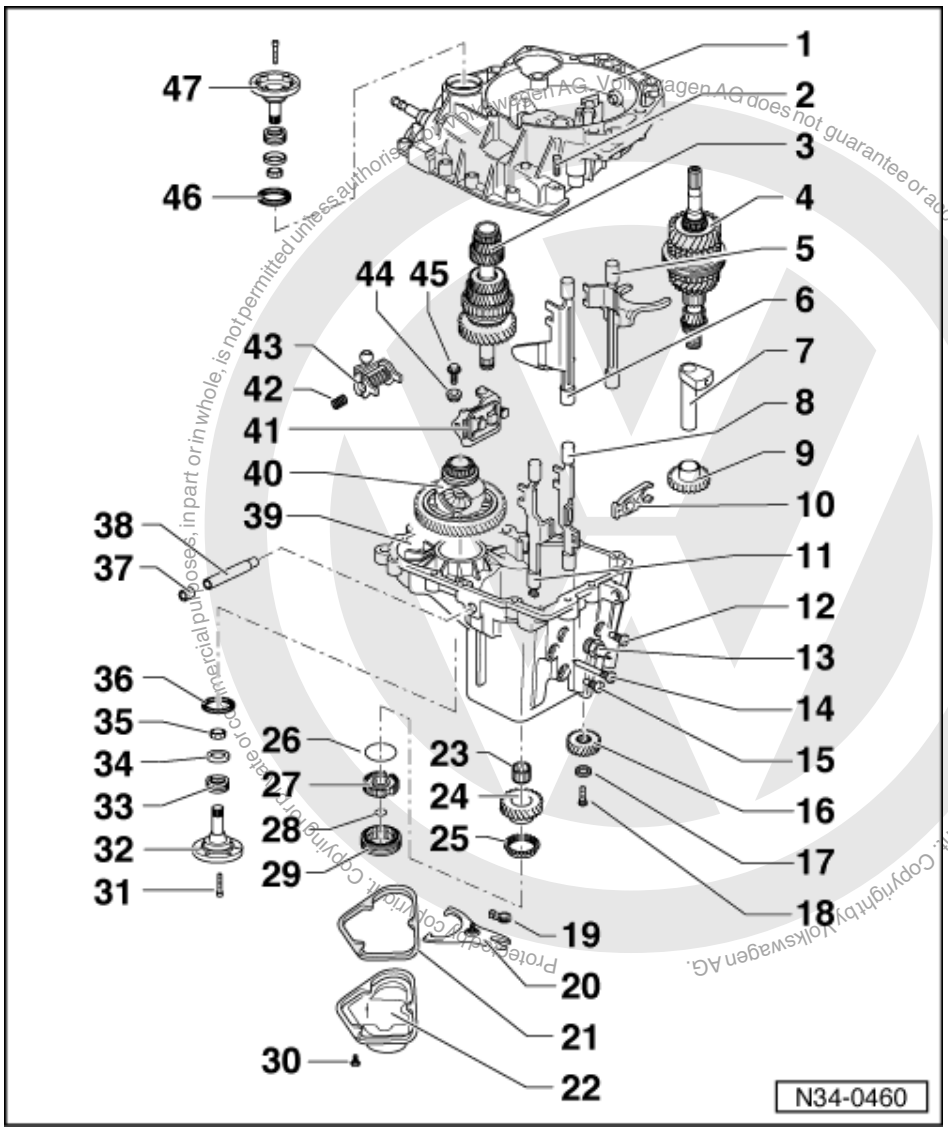


39 Gearbox housing

- If replaced: =>Observe adjustment overview, Page 180
- Insert magnet in gearbox housing, held in place by housing joint surface
- Modification:
  From gearbox build date 23105, position of oil filler hole changed => Fig. 1 .
  Only install new gearbox housing in conjunction with oil collector. Installing oil collector => Fig. 2 .
  New gearbox housing can, in conjunction with oil collector, be installed to previous gearboxes. Filling quantity is then 2.7 ltr.
- Additional modification to gearboxes in conjunction with Diesel engine => Fig. 3

40 Differential

- Dismantling and assembling => page 170

satelettronica

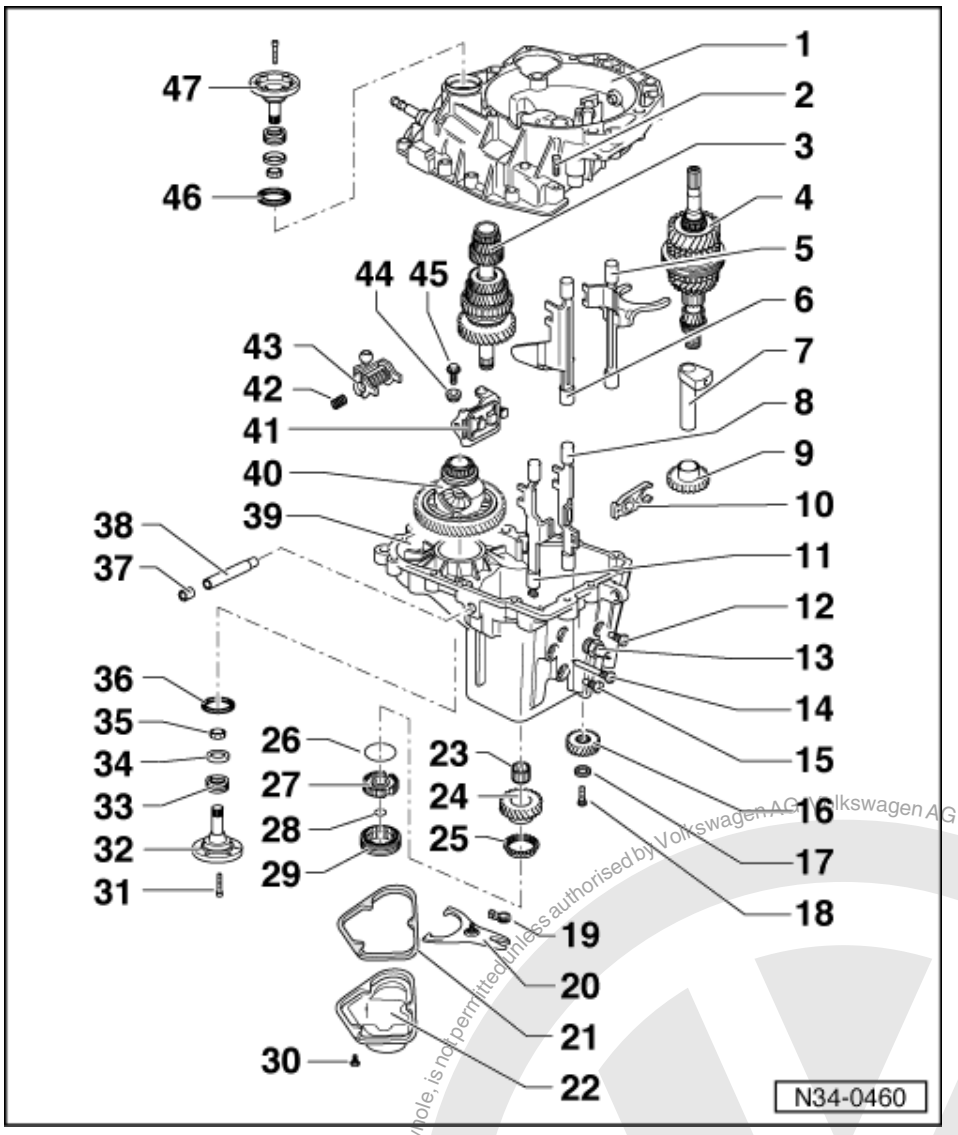


41 Selector console
42 Spring
43 Selector finger
- Modification:
  Vehicles with cable selector mechanism, spring in selector finger adapted => Fig. 4

44 Bush
- For selector console

45 Bolt, 15 Nm
46 Oil seal
- For right-hand flanged shaft
- Left and right-hand diameters differ
- Renewing with gearbox installed => Page 166

47 Flanged shaft
- Do not interchange, left and right-hand flanged shafts differ

Protected by copyright. Copying for private or commercial purposes, in part or in whole, is not permitted unless authorised by Volkswagen AG. Volkswagen AG does not guarantee or accept any liability with respect to the correctness of information in this document. Copyright by Volkswagen AG.
satelettronica

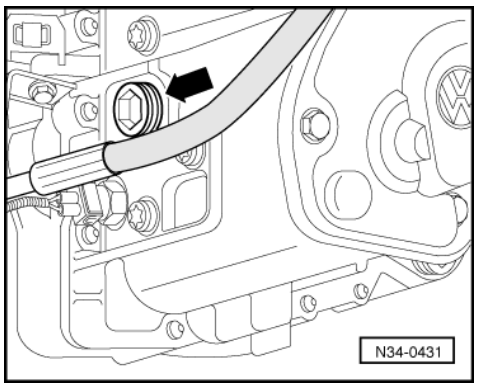


-> Fig.1 Position of oil filler hole changed from gearbox build date 23 10 5

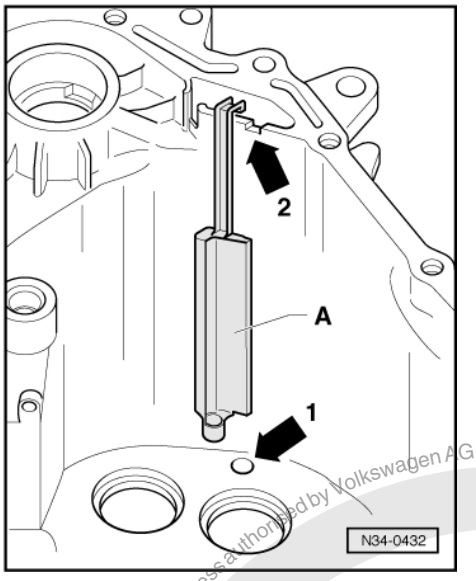


-> Fig.2 Oil collector -A- installation position in gearbox housing, from gearbox date 23 10 5

- Insert oil collector into hole -arrow 1- and slot -arrow 2- simultaneously.

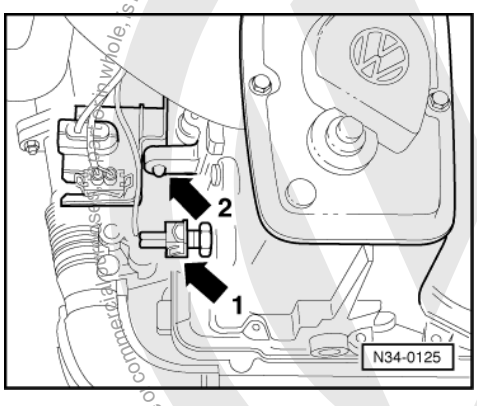


-> Fig.3 Gearbox housing for gearboxes in conjunction with Diesel engine

- If there is an eye/lug (arrow 2) present above the hole for the reversing light switch (arrow 1) then this must be sawn off at housing, if the gearbox is to be used in conjunction with a Diesel engine.

Protected by copyright. Copying for private or commercial purposes, in part or in whole, is not permitted unless authorised by Volkswagen AG. Volkswagen AG does not guarantee or accept any liability with respect to the correctness of information in this document. Copyright by Volkswagen AG.
satelettronica

Vehicles with diesel engine, install starter before installing gearbox.

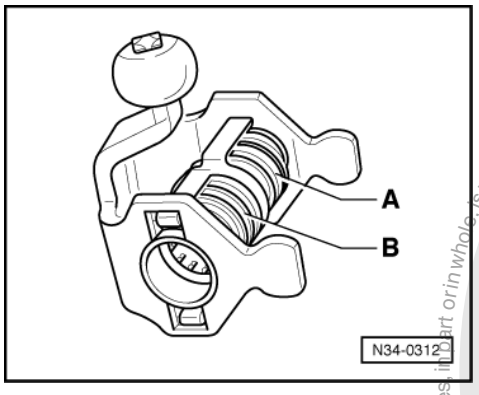


-> Fig.4 Modified selector finger for gearboxes used in conjunction with cable selector mechanism

Selector finger springs -A- and -B- have been modified for cable selector mechanism.

- This modified selector finger must not be installed in other gearboxes.

*Note:*

*Allocate selector finger via parts catalogue.*

## 5.2 - Dismantling and assembling sequence

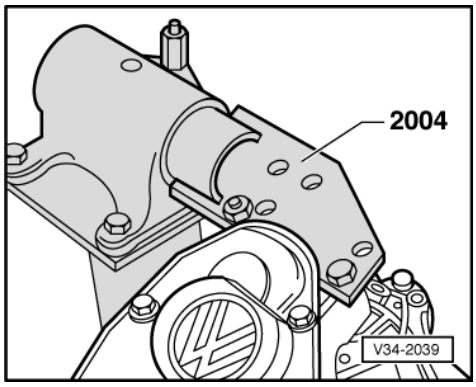


Dismantling and assembling gearbox housing cover, gearbox housing, selector mechanism, input shaft, output shaft (pinion shaft), differential and selector forks

Dismantling

- -> Mount gearbox on repair stand.
- Drain gearbox oil.

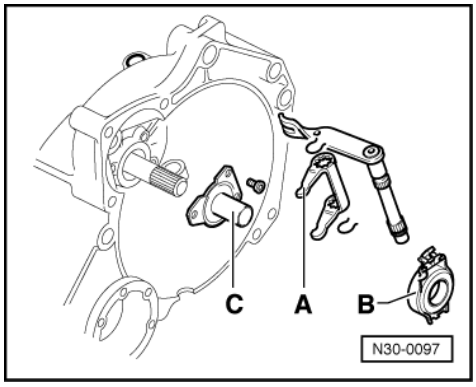


Protected by copyright. Copying for private or commercial purposes, in part or in whole, is not permitted unless authorised by Volkswagen AG. Volkswagen AG does not guarantee or accept any liability with respect to the correctness of information in this document. Copyright by Volkswagen AG.
satelettronica

- -> Remove clutch release lever -A- with release bearing -B-.
- Remove guide sleeve -C-.

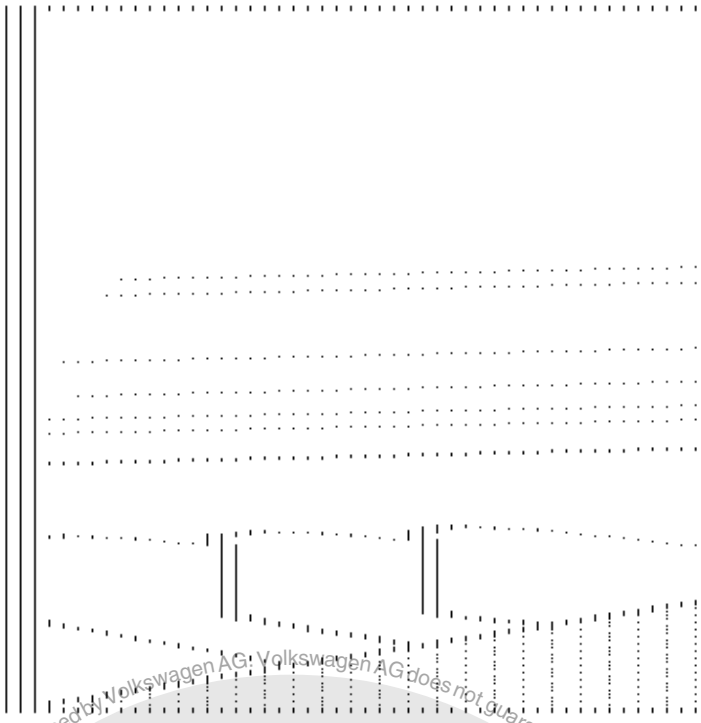

- -> Remove both flanged shafts.
- Take out flanged shafts along with springs, thrust washers and tapered rings.
- Unbolt gearbox housing cover and take off along with seal.

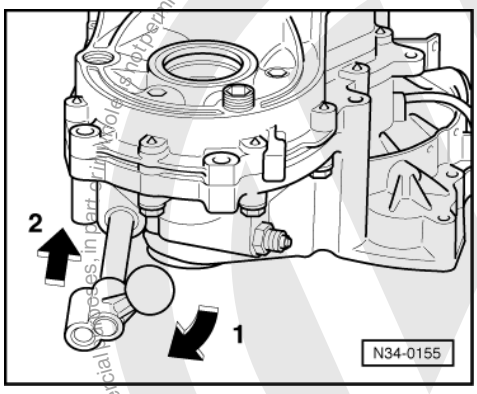


- Screw selector finger onto selector shaft.
- -> Select 5th gear (arrows 1 and 2).

Protected by copyright. Copying for private or commercial purposes, in part or in whole, is not permitted unless authorised by Volkswagen AG. Volkswagen AG does not guarantee or accept any liability with respect to the correctness of information in this document. Copyright by Volkswagen AG.
satelettronica

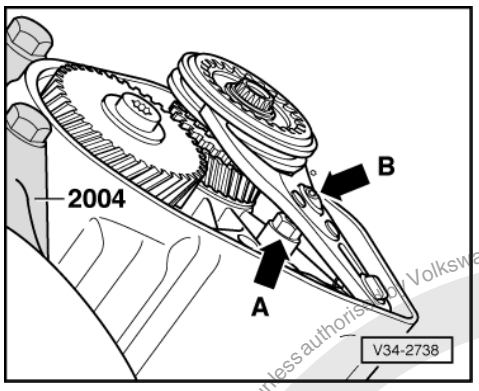


- -> Loosen lock nut (arrow A) below 5th gear fork.
- Unbolt ball head bolt (arrow B) and remove selector fork together with 5th gear locking collar.

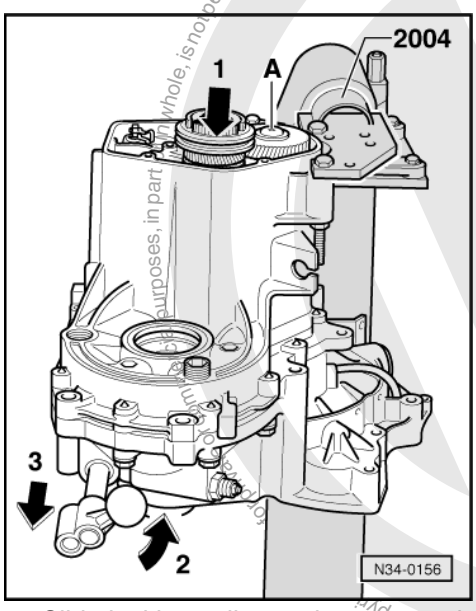


- Slide locking collar again over synchro-hub.
- -> Remove bolt -A- for 5th gear by selecting 5th (arrow 1) and 2nd gear (arrows 2 and 3).
- After engaging both gears the input shaft and output shaft are locked, synchro-hub and gear cannot turn. The bolt can now be loosened.
- Take off 5th gear synchro-hub and take out 2nd gear.

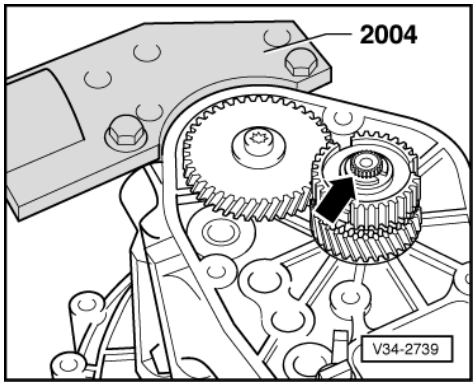


- -> Take off securing ring (arrow) for synchro-hub

Copyright by Volkswagen AG. Volkswagen AG does not guarantee or accept any liability with respect to the correctness of information in this document. Copyright by Volkswagen AG. Volkswagen AG, Wolfsburg (Germany) is not liable for any damages, in part or in whole, is not permitted unless authorised by Volkswagen AG. Volkswagen AG does not guarantee or accept any liability with respect to the correctness of information in this document. Copyright by Volkswagen AG.
satelettronica

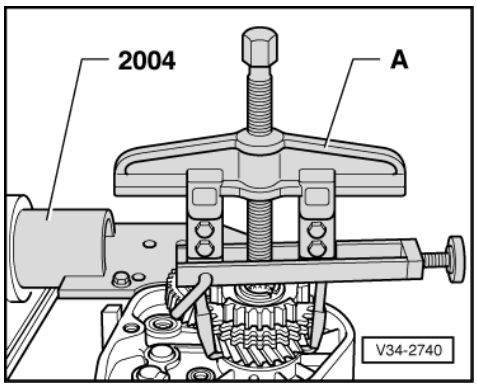


- -> Pull off synchro-hub with 5th selector gear.

  A - Two arm puller e.g. Kukko 20/10 with Matra V/170 hooks.

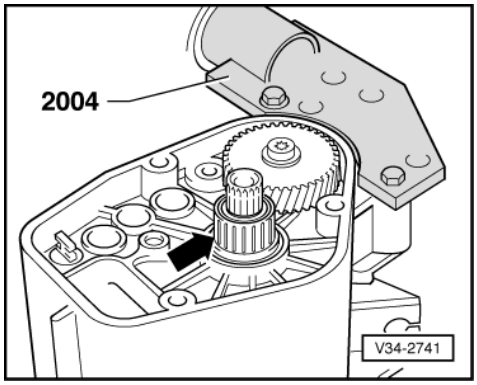


- -> Remove needle roller bearing (arrow).

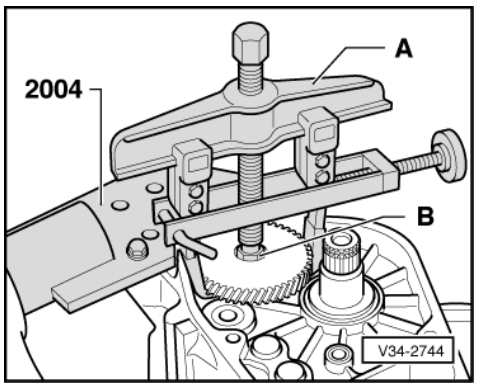


- -> Pull off 5th gear

  A - Two arm puller e.g. Kukko 20/10 with Matra V/170 hooks.
  B - Hexagon bolt M8 x 15 (13 mm AF).
  Sequence for removing:
  Fit two arm puller and centralize by turning screw (arrow). Heat gear wheel with hot air blower V.A.G 1416 and pull off.

***Note:***

*When pulling off the gear wheel ensure that the hooks do not bend outwards, if necessary tighten screw (arrow). After 5th gear wheel has been removed check for damage.*

Copyright by Volkswagen AG. Protected by copyright. Copying for private or commercial purposes, in part or in whole, is not permitted unless authorised by Volkswagen AG. Volkswagen AG does not guarantee or accept any liability with respect to the correctness of information in this document.
satelettronica

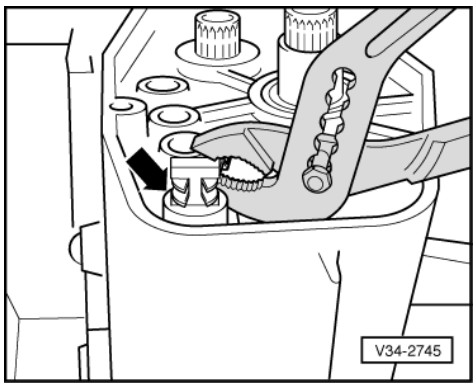


- -> Squeeze clip together (arrow) and take off.
- Remove clutch housing securing bolts.
- Take off clutch housing.
- Take differential off gearbox housing.

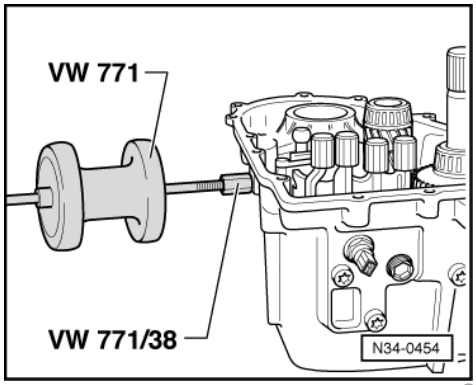


- -> Pull sealing plugs out.

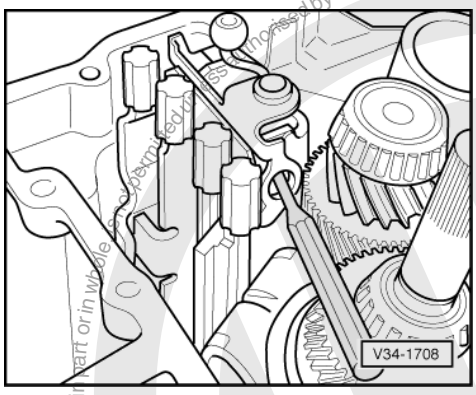


- -> Pull out selector shaft, drive out with a drift if necessary.

Protected by copyright. Copying for private or commercial purposes, in part or in whole, is not permitted unless authorised by Volkswagen AG. Volkswagen AG does not guarantee or accept any liability with respect to the correctness of information in this document. Copyright by Volkswagen AG.
satelettronica

Protected by copyright. Copying for private or commercial purposes, in whole, is not permitted unless authorised by Volkswagen AG. Volkswagen AG does not guarantee or accept any liability with respect to the correctness of information in this document. Copyright by Volkswagen AG.

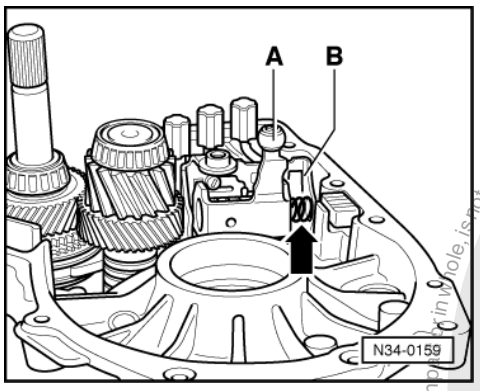


- -> Remove spring (arrow) between selector finger -A- and selector console -B-.
- Remove selector finger -A-.

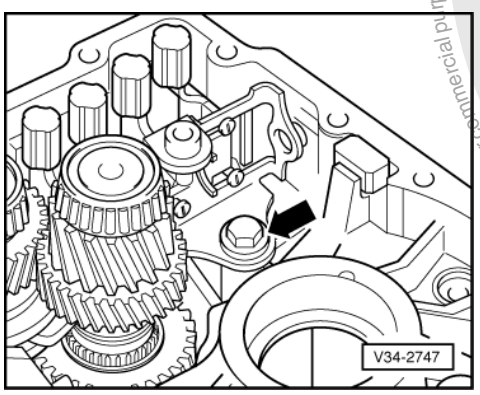


- -> Remove bolt (arrow) and take out selector console with bush.

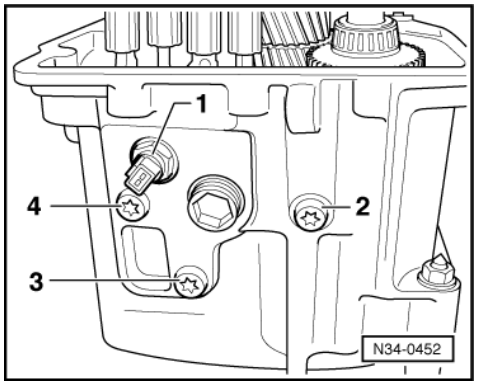


- -> Remove reversing light switch -1- and reverse gear securing bolts -2-, -3- and -4-.

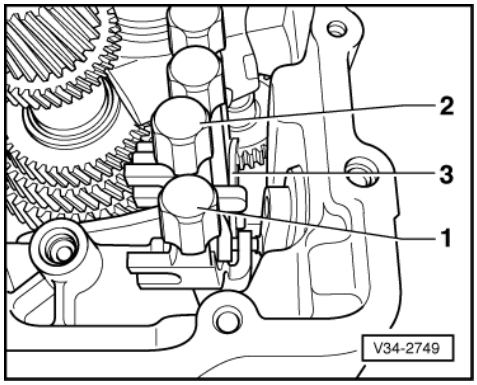


satelettronica

- -> Remove 5th gear selector rod -1- and reverse gear selector rod -2- with reverse lever -3-.

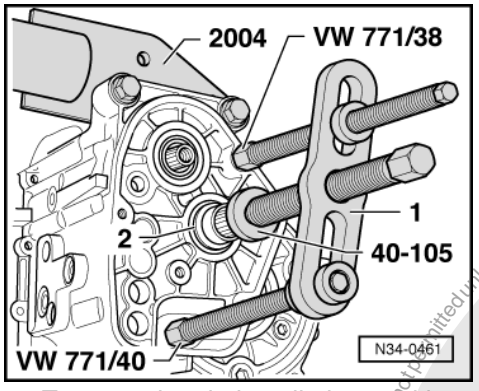


- Turn gearbox in installation position
- -> Press out output shaft with puller -1- e.g. Kukko 18/1. The taper roller bearing outer race -2- is pressed out of the housing when doing this.

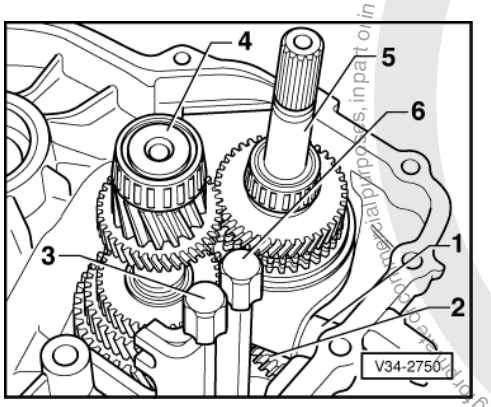


- -> Drive out reverse gear shaft -1-.
- Take out input shaft - 5 -, output shaft -4-, 1st and 2nd gear selector rod -3-, 3rd and 4th gear selector rod -6- as well as reverse gear -2- and shaft -1- from gearbox housing.

## Assembling

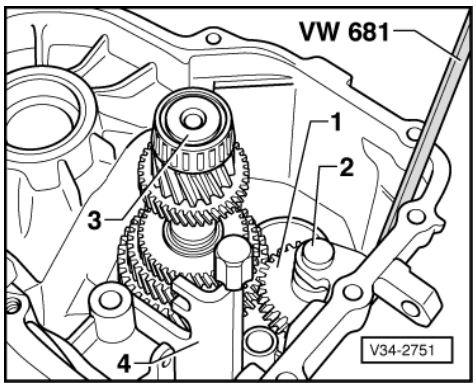


- Press output shaft taper roller bearing outer race into gearbox housing => Page 148 .
- -> Insert output shaft -3- with 1st and 2nd gear selector rod -4-.
- Slide reverse gear -1- over shaft -2- and insert shaft.

Protected by copyright. Copying for private or commercial purposes, in part or in whole, is not permitted unless authorised by Volkswagen AG. Volkswagen AG does not guarantee or accept any liability with respect to the correctness of information in this document. Copyright by Volkswagen AG.
satelettronica

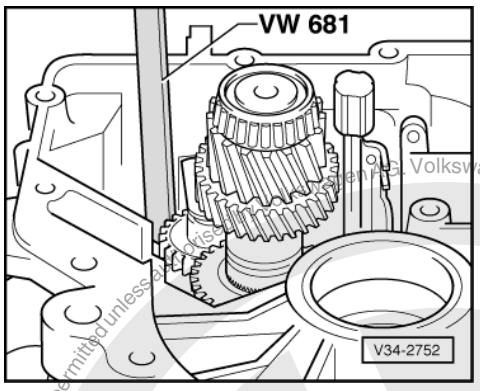


- -> Lift up reverse gear so that the reverse gear lever can be inserted later.

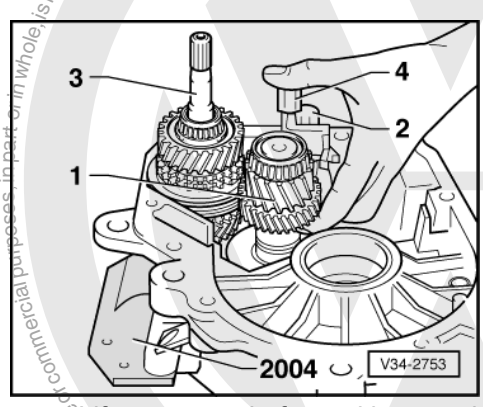


- -> Lift up output shaft -1- with 1st and 2nd gear selector rod slightly and insert again together with input shaft -3- as well as 3rd and 4th gear selector rod -4-.

***Notes:***

- Reverse gear wheel remains lifted with VW 681.
- Guide input shaft with 3rd and 4th gear past output shaft 4th gear during insertion.

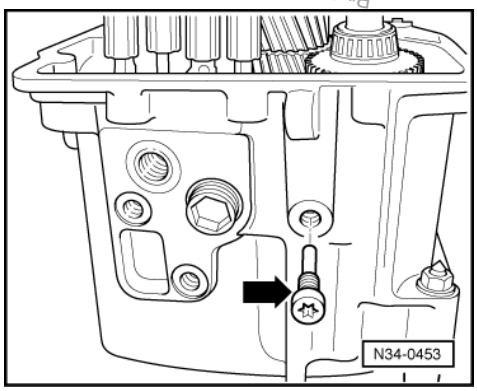


- -> Secure shaft for reverse gear.

Protected by copyright. Copying for private or commercial purposes, in part or in whole, is not permitted unless authorised by Volkswagen AG. Volkswagen AG does not guarantee or accept any liability with respect to the correctness of information in this document. Copyright by Volkswagen AG.
satelettronica

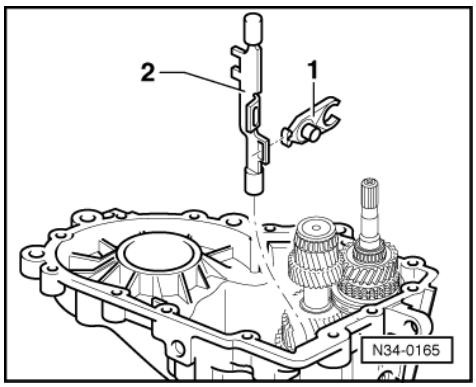


- -> Insert reverse gear lever -1- into reverse gear selector rod -2-.
- Install components, but first insert reverse gear lever into reverse gear.

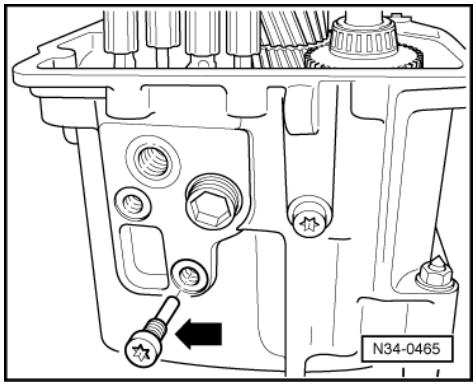


- -> Secure reverse gear lever (arrow).
- Remove special tool VW 681 from gearbox housing.

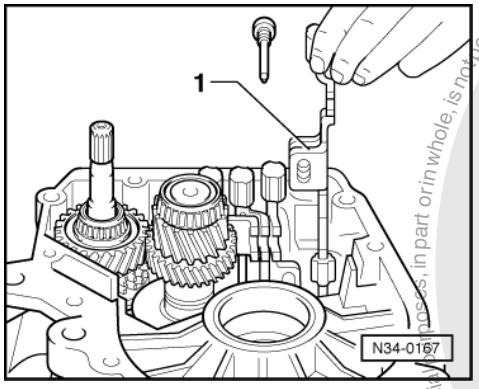


- -> Install 5th gear selector fork -1- and secure.

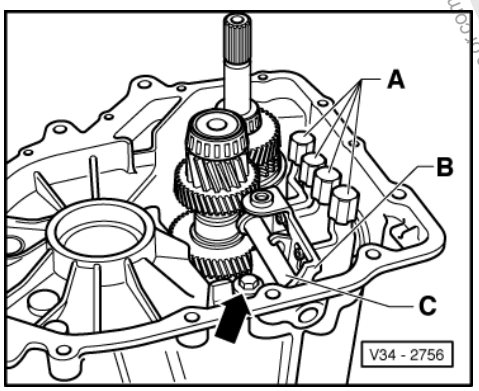


- -> Bring selector rods -A- into neutral.
- Install selector console -B- with bush and bolt.
- Align selector console -B-, to do this insert selector shaft -C- and tighten bolt -arrow-.

Protected by copyright. Copying for private or commercial purposes, in part or in whole, is not permitted unless authorised by Volkswagen AG. Volkswagen AG does not guarantee or accept any liability with respect to the correctness of information in this document. Copyright by Volkswagen AG.
satelettronica

- Remove selector shaft -C- again.

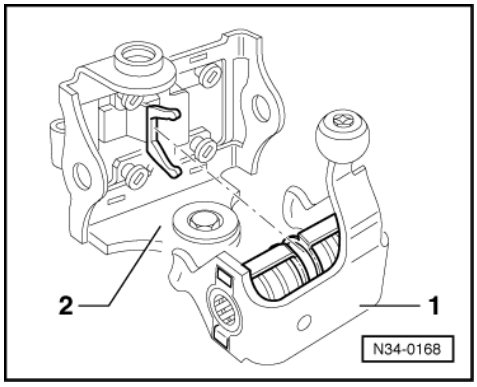


- -> Insert selector finger -1- in selector console -2-.

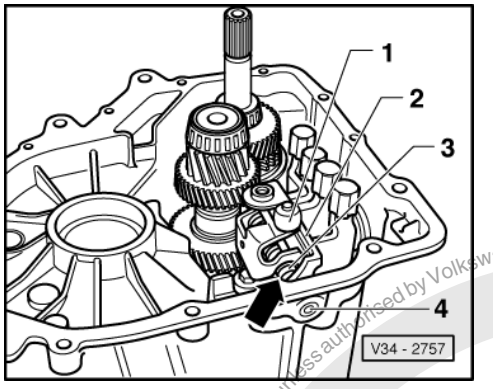


- -> Insert spring (arrow) between selector finger -1- and selector console -2-.
- Push selector shaft -3- into selector finger and selector console.

**Installation position:**

The step points towards input and output shafts.

- Drive sealing plug -4- in flush.
- If necessary adjust selector finger and selector sleeve => Page 134

- Install differential.
- Fit gearbox housing.

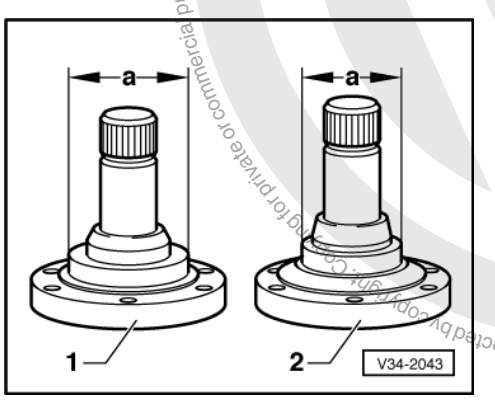


- Fit reversing light switch.
- Install springs, thrust washers, tapered rings and flange shafts. Observe differences between flange shafts.

Protected by copyright. Copying for private or commercial purposes, in part or in whole, is not permitted unless authorised by Volkswagen AG. Volkswagen AG does not guarantee or accept any liability with respect to the correctness of information in this document. Copyright by Volkswagen AG.
satelettronica

-> Differences

| Item | Flanged shaft | Dimension "a" |
|---|---|---|
| 1 | Left, gearbox housing side | 57 mm |
| 2 | Right, clutch housing side | 48 mm |

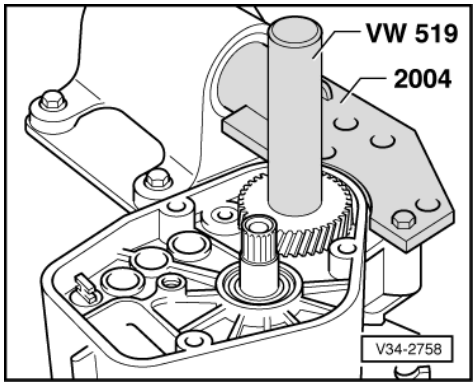


Installation position of 5th gear

The recess on internal diameter faces gearbox housing.

- -> Knock-on 5th gear.

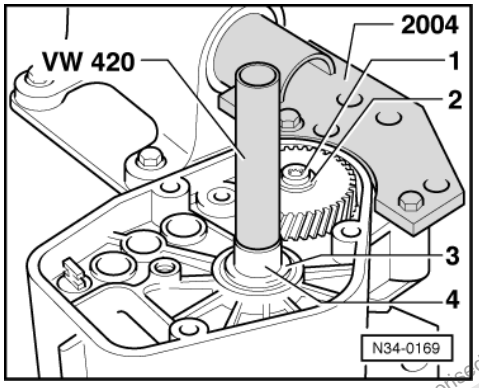


- -> Screw-in new 5th gear securing bolt -1- with dished spring -2-.

Installation position of dished spring for 5th gear securing bolt:

The outer diameter (concave side) faces 5th gear.

- Install thrust washer -3- for 5th gear sliding wheel.

Installation position:

Recess on thrust washer internal diameter faces towards needle roller bearing.

- Heat sleeve -4- for 5th gear needle roller bearing to approx. 100°C on a hot plate then drive on.

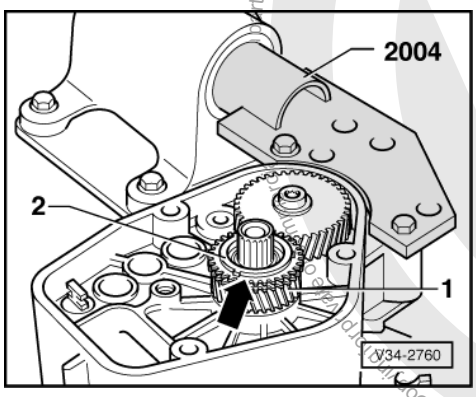


satelettronica
Protected by copyright. Copyright by Volkswagen AG.
Copyright by Volkswagen AG. Volkswagen AG does not guarantee or accept any liability with respect to the correctness of information in this document.
Copyright of this document, or any part of it, may only be reproduced or made available to third parties with the express consent of Volkswagen AG.

- -> Install 5th selector gear -1- with needle roller bearing
- Install spring (arrow) on 5th gear synchro-ring.
- Place 5th gear synchro-ring on gear wheel

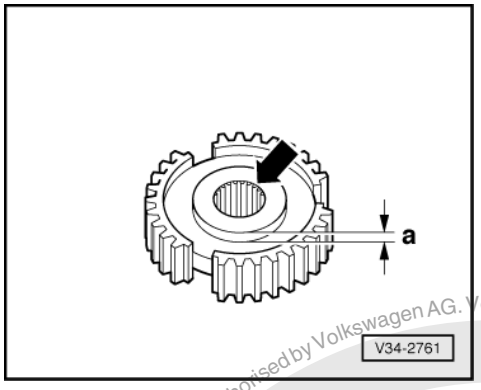


**-> Installation position of 5th gear synchro-hub**

The high shoulder of the synchro-hub (dimension -a-) faces towards gearbox housing.

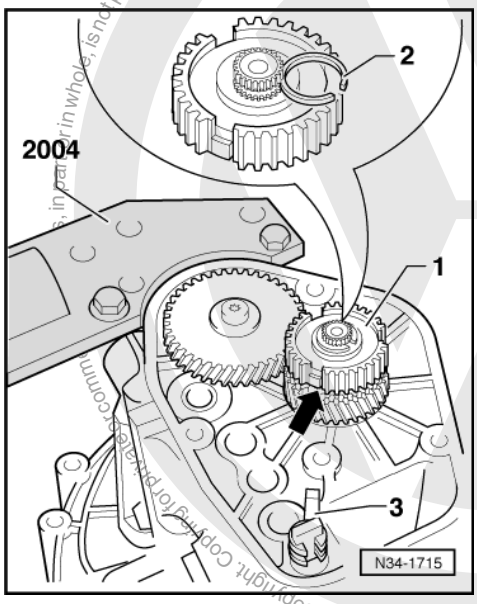


- -> Drive on 5th gear synchro-hub -1- with tool 30-23.

***Note:***

*When driving synchro-hub on ensure synchro-ring is free to move.*

*The locking piece (arrow) must sit in the synchro-ring recess.*

- Determine new circlip -2-.
- Determine and insert circlip -the thickest one that just fits in-.

**Available circlips**

| Thickness (mm) | Part No. |
|---|---|
| 2.00 | 085 311 187 |
| 2.10 | 085 311 187 A |
| 2.20 | 085 311 187 B |
| 2.30 | 085 311 187 C |

Protected by copyright. Copyright by Volkswagen AG. Volkswagen AG does not guarantee or accept any liability with respect to the correctness of information in this document. Copyright by Volkswagen AG.
satelettronica

| Thickness (mm) | Part No. |
|---|---|
| 2.40 | 085 311 187 D |
| 2.50 | 085 311 187 E |
| 2.60 | 085 311 187 F |

- Squeeze clip -3- together and insert on 5th gear selector rod.

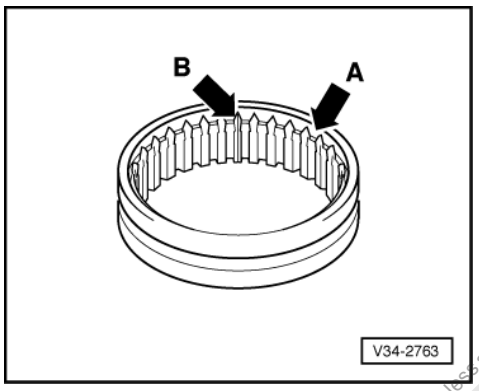


**-> Installation position of 5th gear locking collar**

Install teeth points (arrow A) towards 5th selector gear.

- The marked splines (arrow B) are to be inserted into the recesses on the synchro-hub.

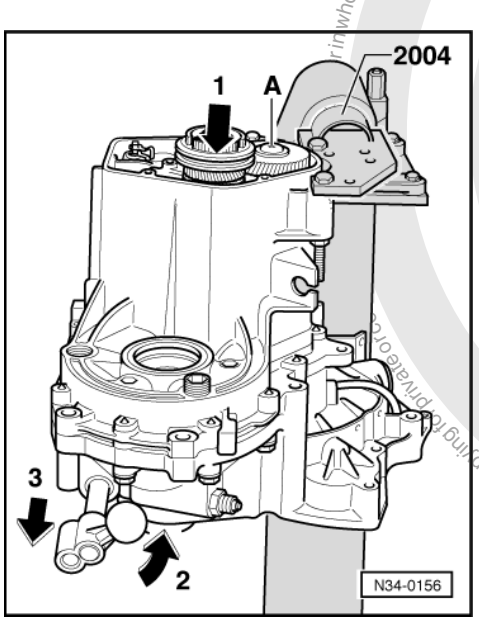


- -> Tighten 5th gear bolt -A-, to do this select 5th (arrow 1) and 2nd gear (arrows 2 and 3).
- Remove locking collar again.

Protected by copyright. Copying for private or commercial purposes, in whole or in part, is not permitted unless authorised by Volkswagen AG. Volkswagen AG does not guarantee or accept any liability with respect to the correctness of information in this document. Copyright by Volkswagen AG.
satelettronica

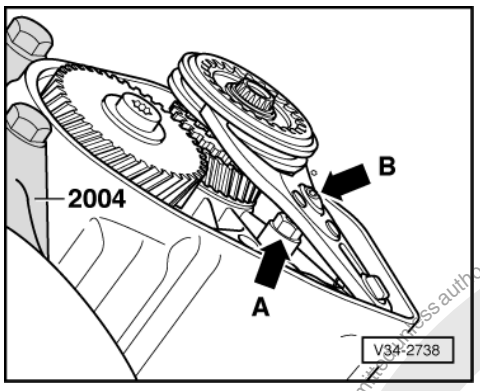


- Clean ball stud threads in housing, use an M8x1 thread tap if necessary.
- Insert locking collar together with 5th gear selector rod.
- -> Turn back lock nut (arrow A) below 5th gear selector rod.
- Screw in ball headed bolt (arrow B).

Adjusting 5th gear:

Basic setting

- Coat threads on ball head bolt with locking fluid D 000 600.

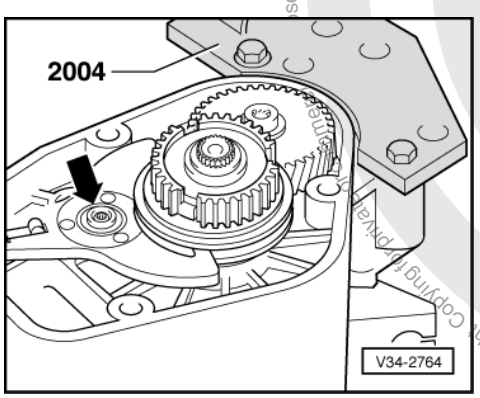


- Turn gearbox to installation position.
- All selector rods in neutral.
- Loosen ball head bolt lock nut.
- -> Adjust ball head bolt (arrow) so that the locking collar is flush with the synchro-hub.

Fine adjustment

- Select 5th gear.

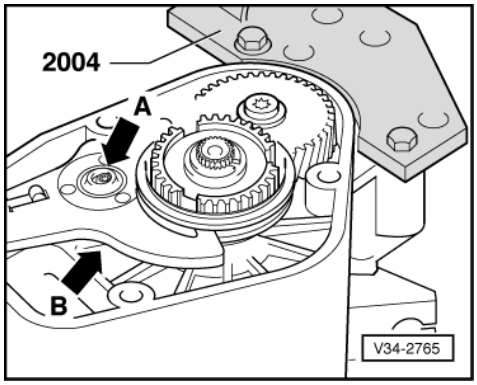


- -> Turn ball head bolt (arrow A) in so far so that there is no axial play in the locking collar groove for 5th gear selector fork.
- Then turn ball head bolt (arrow A) back so that play can just be felt between locking collar and selector fork (approx.1/8 turn).

Protected by copyright. Copying for private or commercial purposes, in part or in whole, is not permitted unless authorised by Volkswagen AG. Volkswagen AG does not guarantee or accept any liability with respect to the correctness of information in this document. Copyright by Volkswagen AG.
satelettronica

- Lock ball head bolt (arrow A) with lock nut (arrow B) below 5th gear fork to gearbox housing, ensuring that the ball head bolt has not turned.
- Disengage 5th gear. Locking collar must now be in the neutral position. Synchro-ring must move freely.
- Fit seal.
- Fit gearbox housing cover

# 6 - Servicing clutch housing

## 6.1 - Servicing clutch housing

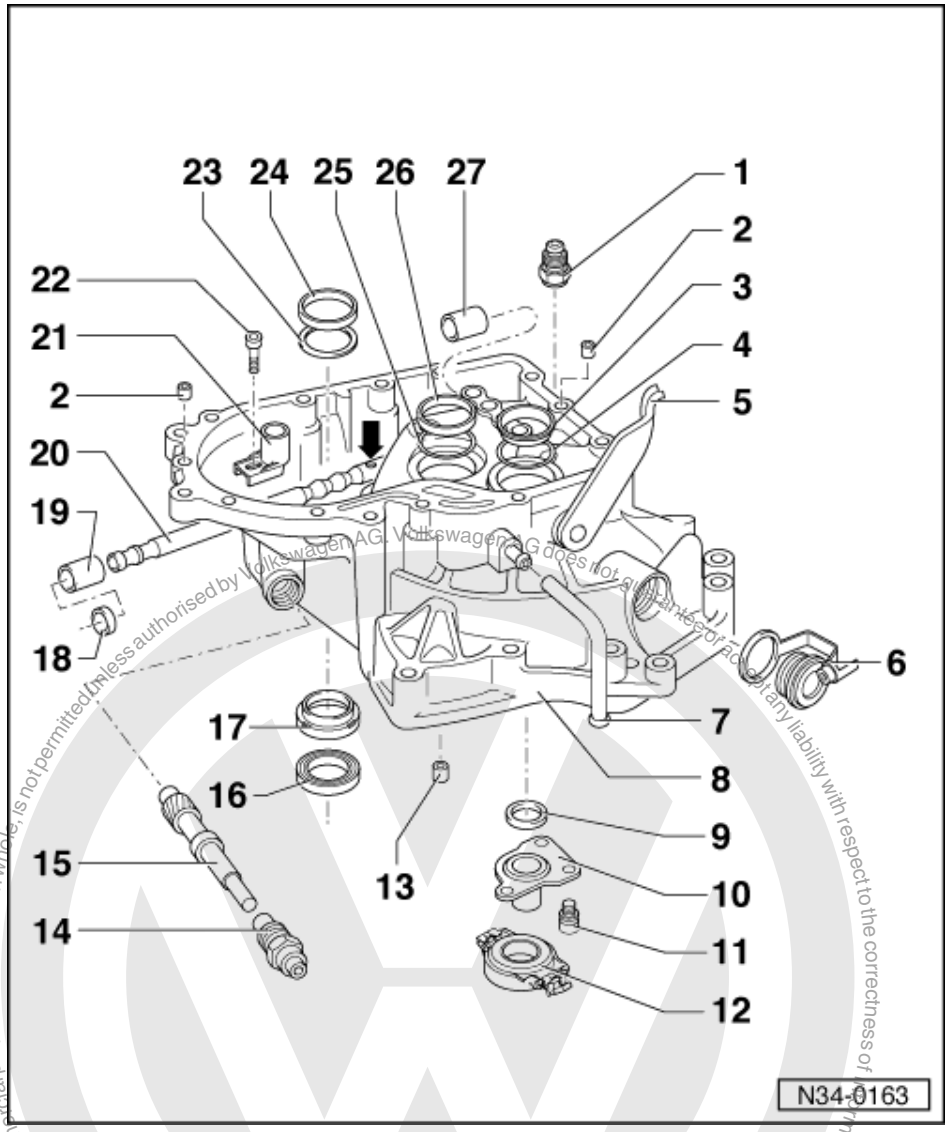


1 Locking bolt, 40 Nm
- For selector shaft

2 Dowel sleeve
- Qty. 2

3 Outer race/taper roller bearing
- For input shaft
- Removing and installing => Page 139

4 Shim
- For input shaft
- Determining thickness => Page 145

5 Release shaft

Protected by copyright. Copying for private or commercial purposes, in part or in whole, is not permitted unless authorised by Volkswagen AG. Volkswagen AG does not guarantee or accept any liability with respect to the correctness of information in this document. Copyright by Volkswagen AG.
satelettronica

- Removing and installing
  => Page 40

6 Sealing bolt with plug

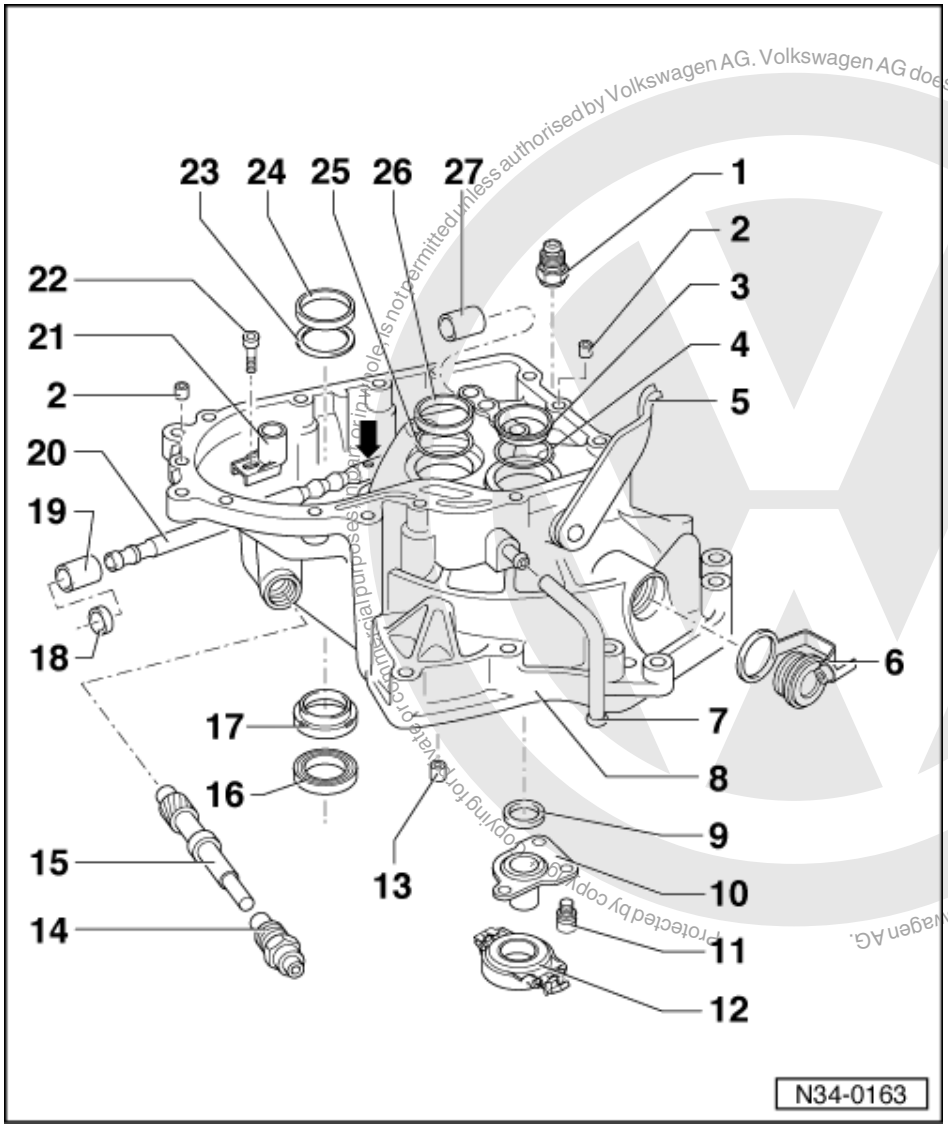


7 Breather pipe

8 Clutch housing
- If replaced: =>Observe adjustment overview, Page 180
- Modifications:
  Gearboxes for vehicles with cable selector mechanism, additional threaded mounting point => Fig. 1
- Different gearbox mounting flanges for petrol and Diesel engines => Parts catalogue

9 Input shaft oil seal
- Removing => Fig. 3
- Installing => Fig. 4

10 Guide sleeve

11 Bolt, 20 Nm

12 Release bearing
- Removing and installing
  => Page 41

Protected by copyright. Copying for private or commercial purposes, in whole or in part, is not permitted unless authorised by Volkswagen AG. Volkswagen AG does not guarantee or accept any liability with respect to the correctness of information in this document. Copyright by Volkswagen AG.
satelettronica

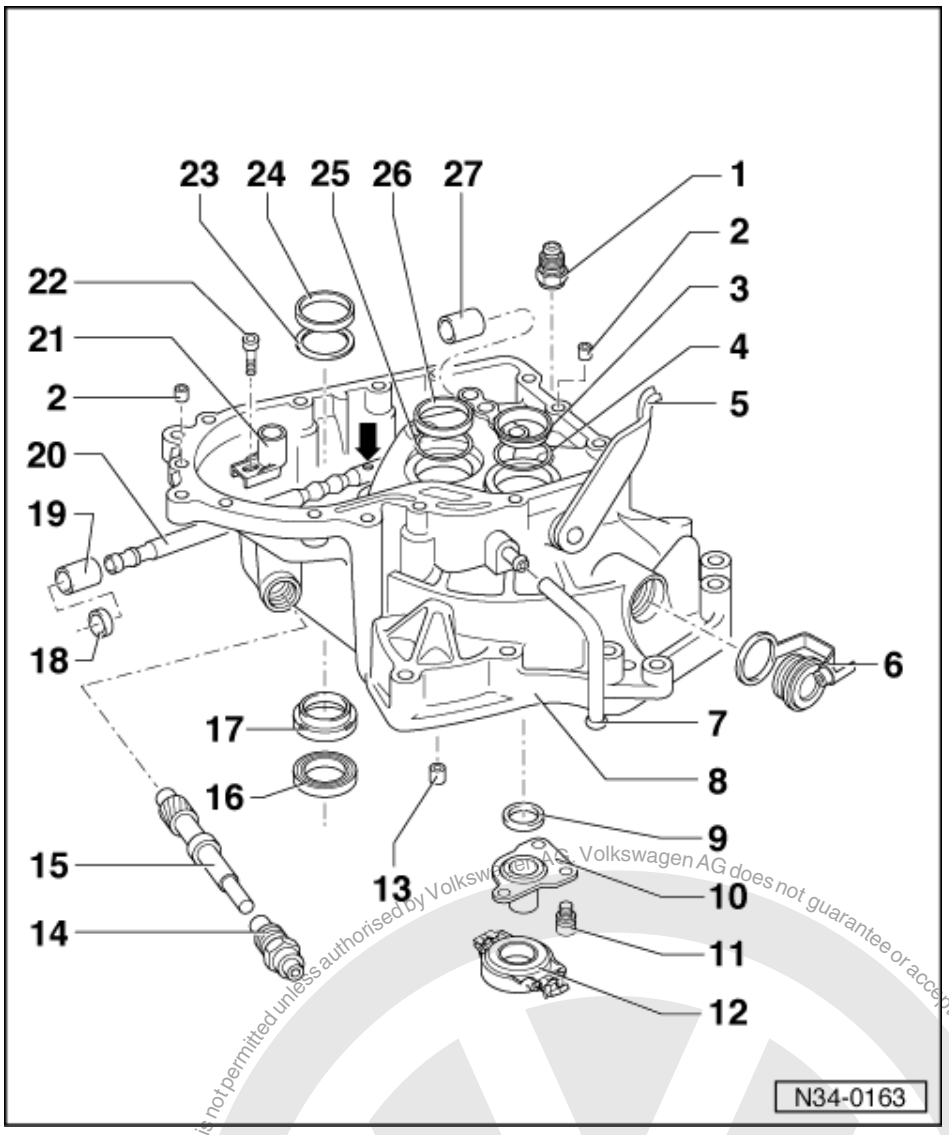


13 Mounting bush
- Only in conjunction with petrol engine
- Removing => Fig. 5
- Installing => Fig. 6

14 Guide bush

15 Drive shaft with pinion
- For speedometer

16 Flange shaft oil seal
- Removing => Fig. 7
- Installing => Fig. 8
- Renewing with gearbox installed => page 168

17 Sleeve
- For oil seal (Item 16 )
- Removing => Fig. 9
- Installing => Fig. 10

18 Oil seal
- For selector shaft
- Carefully lever out using screwdriver => fig. 11
- Installing => fig. 12
- Can be renewed with gearbox installed =>page 166

satelettronica
Volkswagen AG does not guarantee or accept any liability with respect to the correctness of information in this document. Copyright by Volkswagen AG. Volkswagen AG. Copyright by Volkswagen AG. Reproduction and use not permitted unless authorised by Volkswagen AG.

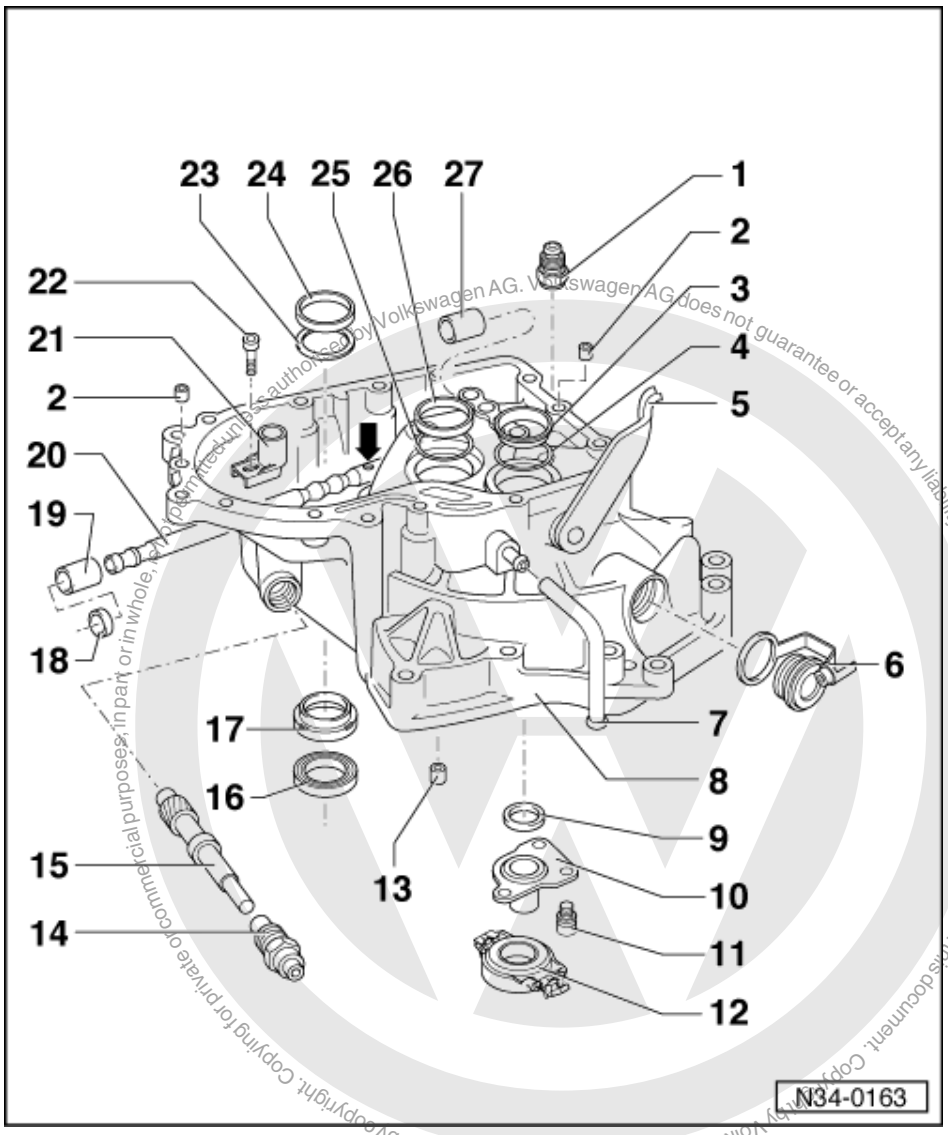


19 Front ball sleeve

- For selector shaft
- Removing and installing
  =>Fig. 13

20 Selector shaft

- Installation position: The countersunk (arrow) points towards selector sleeve (Item 21 )
- Check seat of bearing and inner racer of roller bearing for burrs and damage
- Grease sliding surfaces with
  MoS2 grease
- Adjusting => Page 134
- Modification:
  Gearboxes for vehicles with cable selector control, new selector finger mounting => Fig. 2

21 Selector sleeve

- Adjusting => Page 134

22 Bolt, 25 Nm

23 Shim

- For differential
- Determining thickness => Page 180

Protected by copyright. Copying for private or commercial purposes, in part or in whole, is not permitted unless authorised by Volkswagen AG. Volkswagen AG does not guarantee or accept any liability with respect to the correctness of information in this document. Copyright by Volkswagen AG.
satelettronica

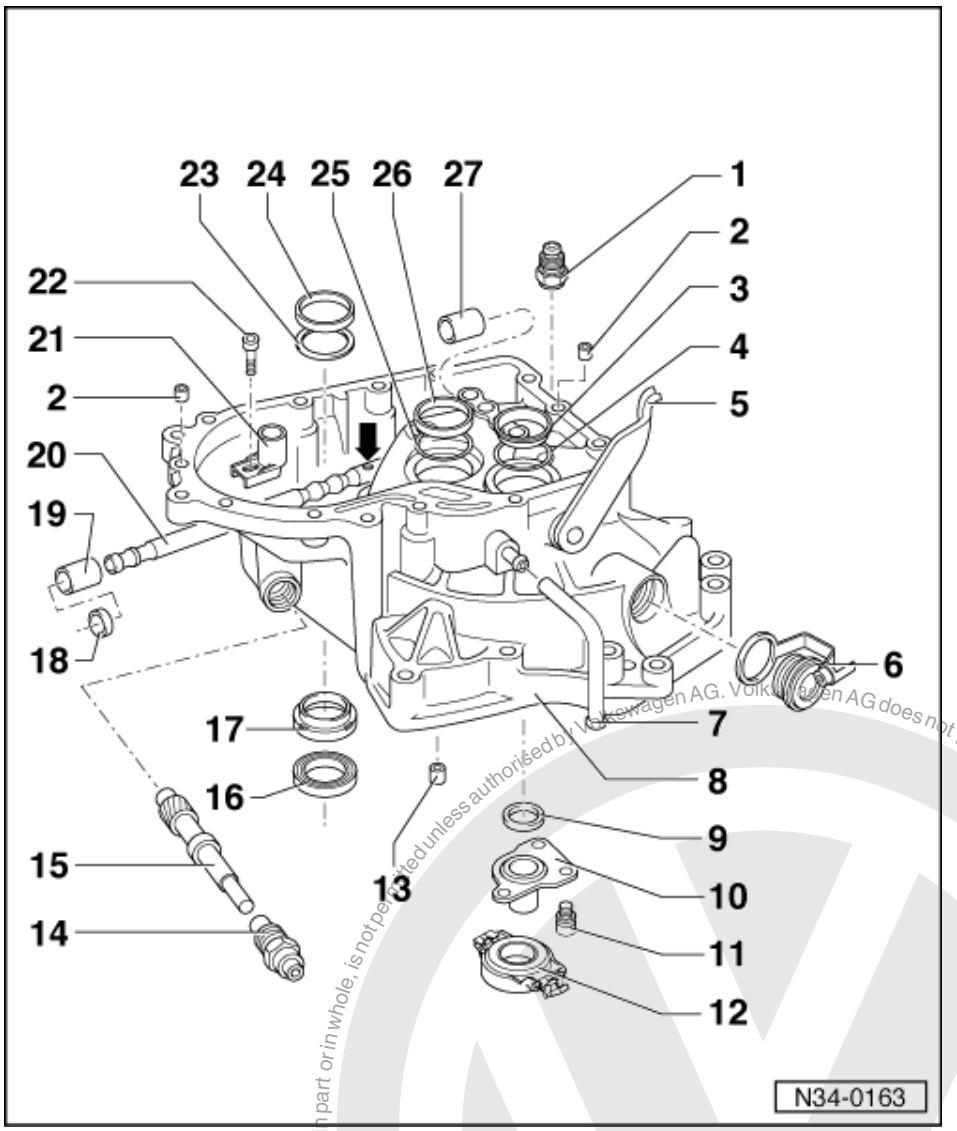


24 Outer race/taper roller bearing
- For differential
- Removing and installing => Page 170
- If replaced: Adjust differential => Page 180

25 Shim
- For output shaft
- Determining thickness => Page 163

26 Outer race/taper roller bearing
- For output shaft
- Removing and installing => Page 148

27 Rear ball sleeve
- For selector shaft
- Removing and installing =>Fig. 14

Protected by copyright. Copying for private or commercial purposes, in part or in whole, is not permitted unless authorised by Volkswagen AG. Volkswagen AG does not guarantee or accept any liability with respect to the correctness of information in this document. Copyright by Volkswagen AG.
satelettronica

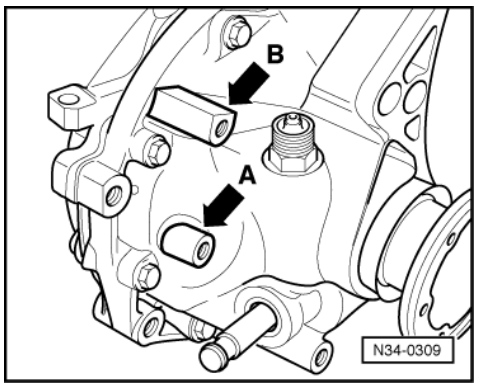


-> Fig.1 Modified clutch housing for gearboxes used in conjunction with cable selector mechanism
The clutch housing is equipped with two threaded mounting points (arrows A and B) for mounting the relay lever/selector cable bracket.

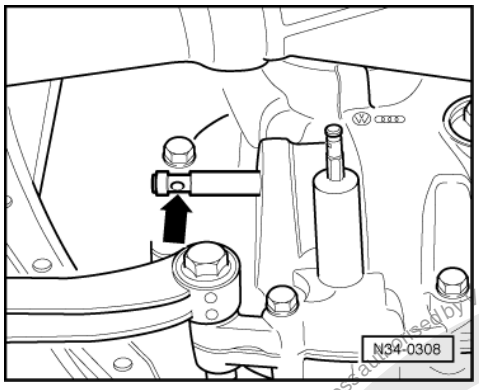


-> Fig.2 Modified selector shaft for gearboxes used in conjunction with cable selector mechanism
The selector shaft has only one recess (arrow) to accept the selector finger securing bolt as opposed to previous selector shaft.
*Note:*
*The selector shaft cannot be installed in previous gearboxes.*

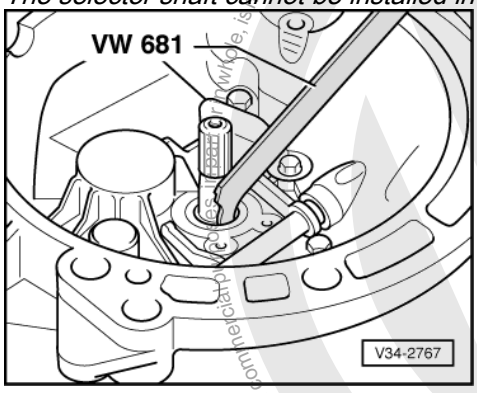


-> Fig.3 Pulling out output shaft oil seal.

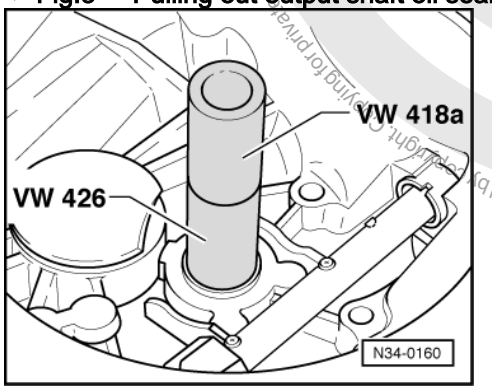


Protected by copyright. Copying for private or commercial purposes, in whole or in part, is not permitted unless authorised by Volkswagen AG. Volkswagen AG does not guarantee or accept any liability with respect to the correctness of information in this document. Copyright by Volkswagen AG.
satelettronica

-> Fig.4 Driving in output shaft oil seal.
Installation position:
2.5 mm below housing upper surface.

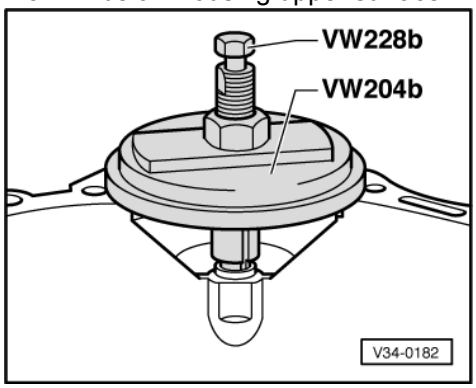


-> Fig.5 Pulling out starter bush.

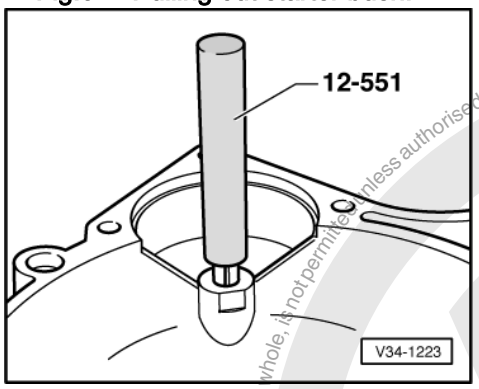


-> Fig.6 Driving in starter bush.
- Lubricate bush mounting before driving in.

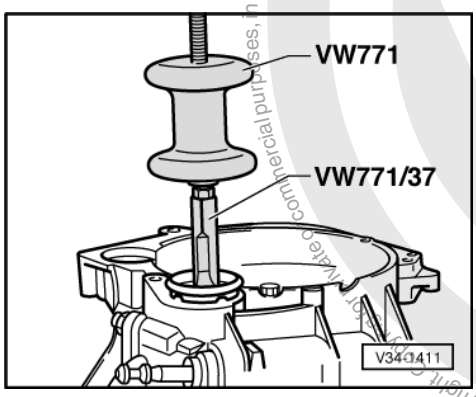


-> Fig.7 Pulling in flange shaft oil seal.

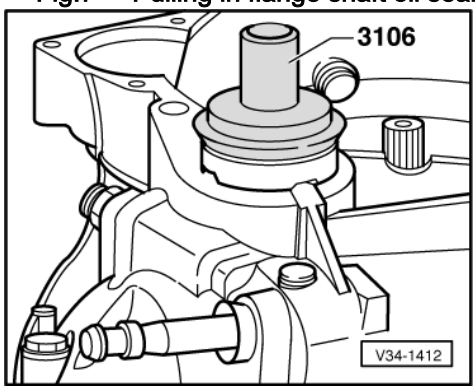


Protected by copyright. Copyright by Volkswagen AG. Volkswagen AG does not guarantee or accept any liability with respect to the correctness of information in this document. Copyright by Volkswagen AG. Copying for private or commercial purposes, in part or in whole, is not permitted unless authorised by Volkswagen AG.
satelettronica

-> Fig.8 Driving in flange shaft oil seal.

- Use the relevant side of the tool for the seals.
- Fill space between seal and dust lip with multi-purpose grease.

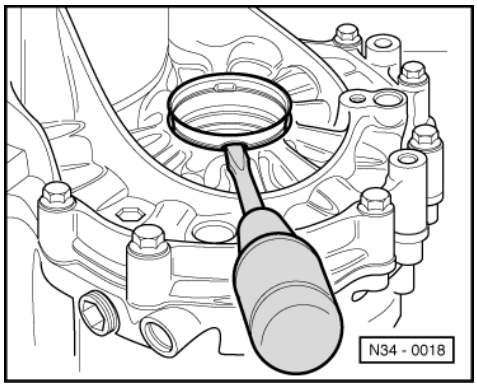


-> Fig.9 Lever out sleeve with screwdriver

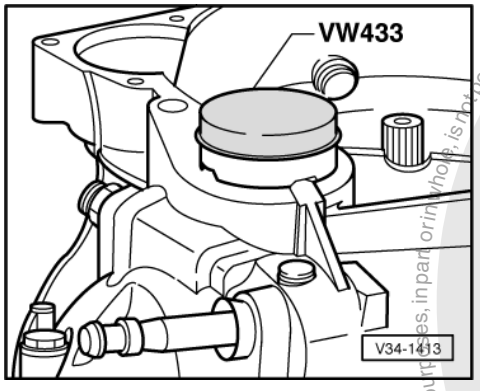


-> Fig.10 Driving in sleeve

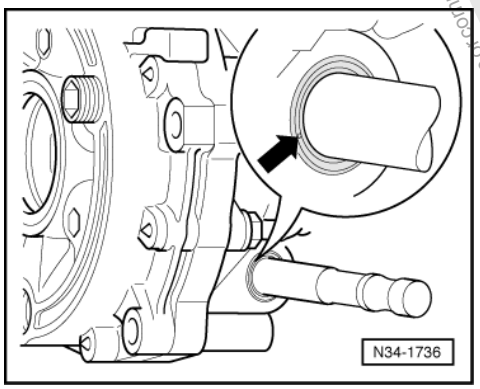


-> Fig.11 Levering out seal using screwdriver

- Remove selector shaft.
- To prevent damage to the selector shaft, wrap thin layer of insulation tape around it.
- Push selector shaft in onto stop.
- Carefully punch a hole in the middle of the seal (arrow) using a small screwdriver.
- Then lever out the seal using a slightly larger screwdriver.

Protected by copyright. Copying for private or commercial purposes, in part or in whole, is not permitted unless authorised by Volkswagen AG. Volkswagen AG does not guarantee or accept any liability with respect to the correctness of information in this document. Copyright by Volkswagen AG.
satelettronica

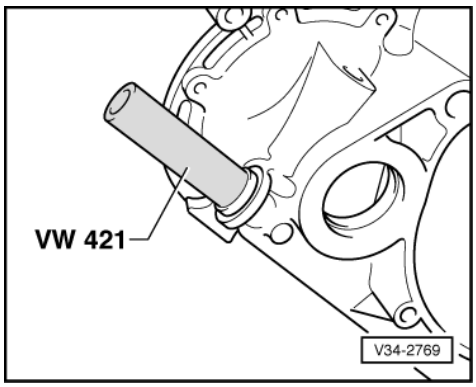


- Remove insulation tape and check selector shaft for damage.

**-> Fig.12 Press in seal onto stop**

- Lightly oil outer circumference of oil seal.
- Fill space between sealing lip and dust lip with grease G 052 128 A1.
- Carefully push seal over chamfer of selector shaft in a twisting motion.

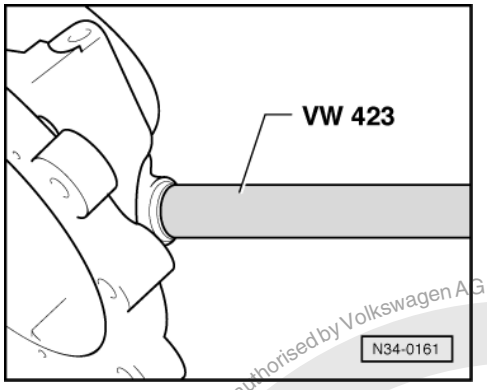


**-> Fig.13 Removing and installing front ball sleeve**

Installation position:

10 mm below housing upper surface.

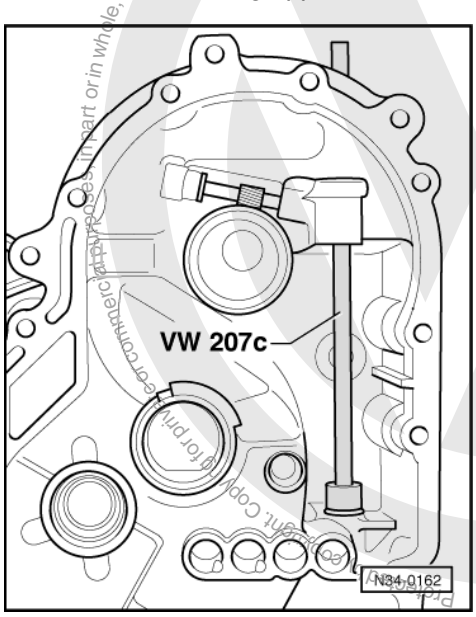


satelettronica
Copyright by Volkswagen AG. Volkswagen AG does not guarantee or accept any liability with respect to the correctness of information in this document. Copyright by Volkswagen AG. Copy or part of this document is not permitted unless authorised by Volkswagen AG.

-> Fig.14 Removing and installing rear ball sleeve

Installation position:

The ball sleeve must be flush in the rear area with the mounting eye.

# 7 - Adjusting selector finger and selector sleeve

## 7.1 - Adjusting selector finger and selector sleeve

*Note:*

*The adjustment is only be carried out if selector finger, selector sleeve, clutch housing, gearbox housing, inner selector lever or inner selector lever locking mechanism has been changed.*

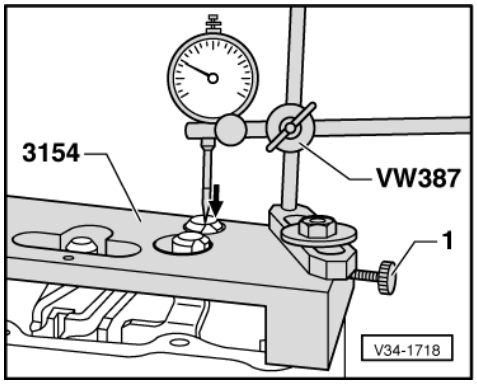


- -> Fit gauge 3154 with dowel sleeves onto gearbox housing.
- Secure mounting VW 387 with gauge and gauge extension.
- Fit gauge onto reverse gear selector rod and set with 1 mm preload.
- Push selector rod in direction of arrow and set gauge to 0.
- Press selector rod in opposite direction, from below, and read off measurement (example: 0.70 mm).
- Arrest selector rod in central position (example: 0.70 mm / 2 = 0.35 mm). To do this push selector rod from below until the value 0.35 mm is achieved and then clamp selector rod with bolt -1-.

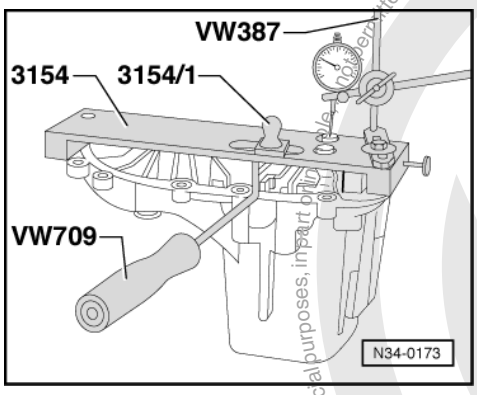


- -> Pull selector finger with VW 709 into reverse gear gate and fit measuring finger 3154/1.

satelettronica
Protected by copyright. Copying for private or commercial purposes, in part or in whole, is not permitted unless authorised by Volkswagen AG. Volkswagen AG does not guarantee or accept any liability with respect to the correctness of information in this document. Copyright by Volkswagen AG.

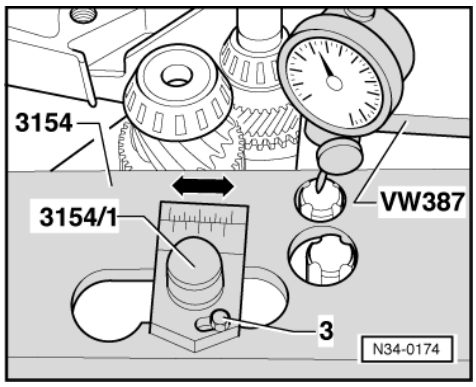


- -> Push measuring finger from stop to stop and read off the value on the measurement scale (example: 0.60 mm).
- Half measuring value (example: 0.60 mm / 2 = 0.30 mm) and tighten bolt -3-.
- Remove mounting VW 387.

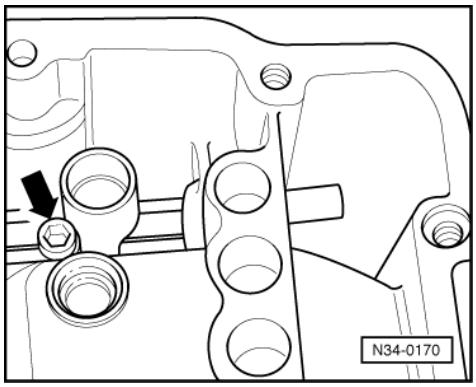


- -> Loosen clamping bolt (arrow) only so far as to allow the selector sleeve to be moved slightly on the inner selector lever.
- Place inner selector lever in central stop position.

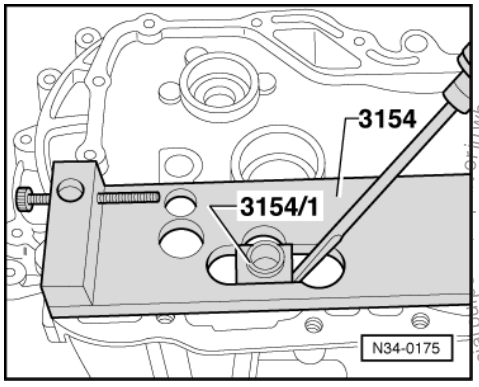


- -> Insert dowel sleeves into clutch housing and fit gauge 3154 on the clutch housing, turned through 180° so that the selector finger and selector sleeves align.
- Tighten selector sleeve clamping bolt.

Protected by copyright. Copying for private or commercial purposes, in whole, is not permitted unless authorised by Volkswagen AG. Volkswagen AG does not guarantee or accept any liability with respect to the correctness of information in this document. Copyright by Volkswagen AG.
satelettronica

# 35 - Gears, Shafts

## 1 - Dismantling and assembling input shaft

### 1.1 - Dismantling and assembling input shaft

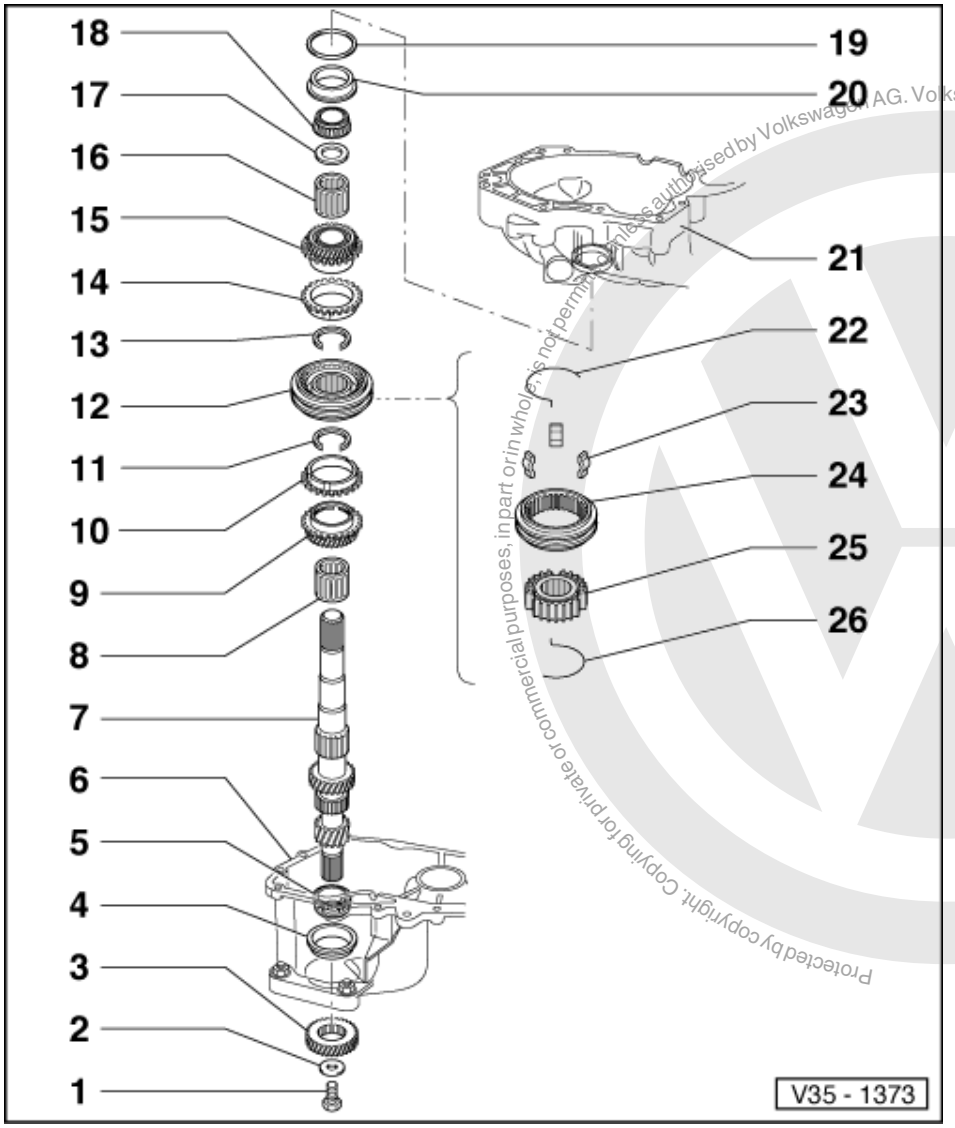


*Notes:*
- When installing new gears, consult technical data =>page 2 .
- If the position of the taper roller bearings is affected when exchanging parts, the input shaft must be re-adjusted. See adjustment overview => Page 180

1 Torx socket head bolt M 8, 40 Nm
- Fitted piece on bolt head locates dished spring.

2 Dished washer

3 5th gear
- Removing and installing

Protected by copyright. Copying for private or commercial purposes, in part or in whole, is not permitted unless authorised by Volkswagen AG. Volkswagen AG does not guarantee or accept any liability with respect to the correctness of information in this document. Copyright by Volkswagen AG.
satelettronica

=> Page 105

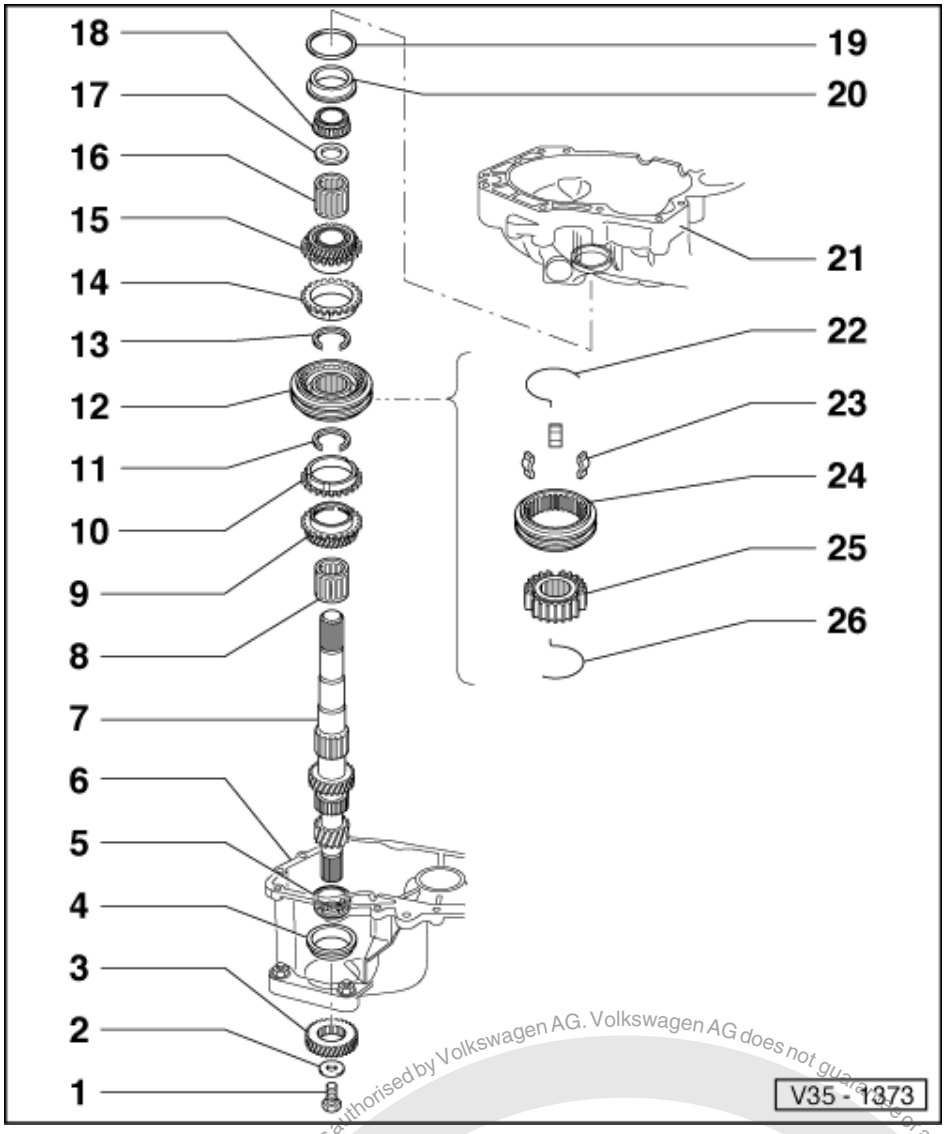


4 Taper roller bearing outer race
- Pressing out => Fig. 1
- Pressing in => Fig. 2

5 Taper roller bearing inner race
- Pulling off => Fig. 3
- Pressing on => Fig. 4

6 Gearbox housing

7 Input shaft
- Adjusting => Page 145

8 Needle roller bearing
- Lubricate before inserting

9 Selector gear for 3rd gear
- Pressed off with locking collar/3rd and 4th gear synchro-hub => Fig. 8 and pressed on => Fig.13

satelettronica

Protected by copyright. Copying for private or commercial purposes, in part or in whole, is not permitted unless authorised by Volkswagen AG. Volkswagen AG does not guarantee or accept any liability with respect to the correctness of information in this document. Copyright by Volkswagen AG.

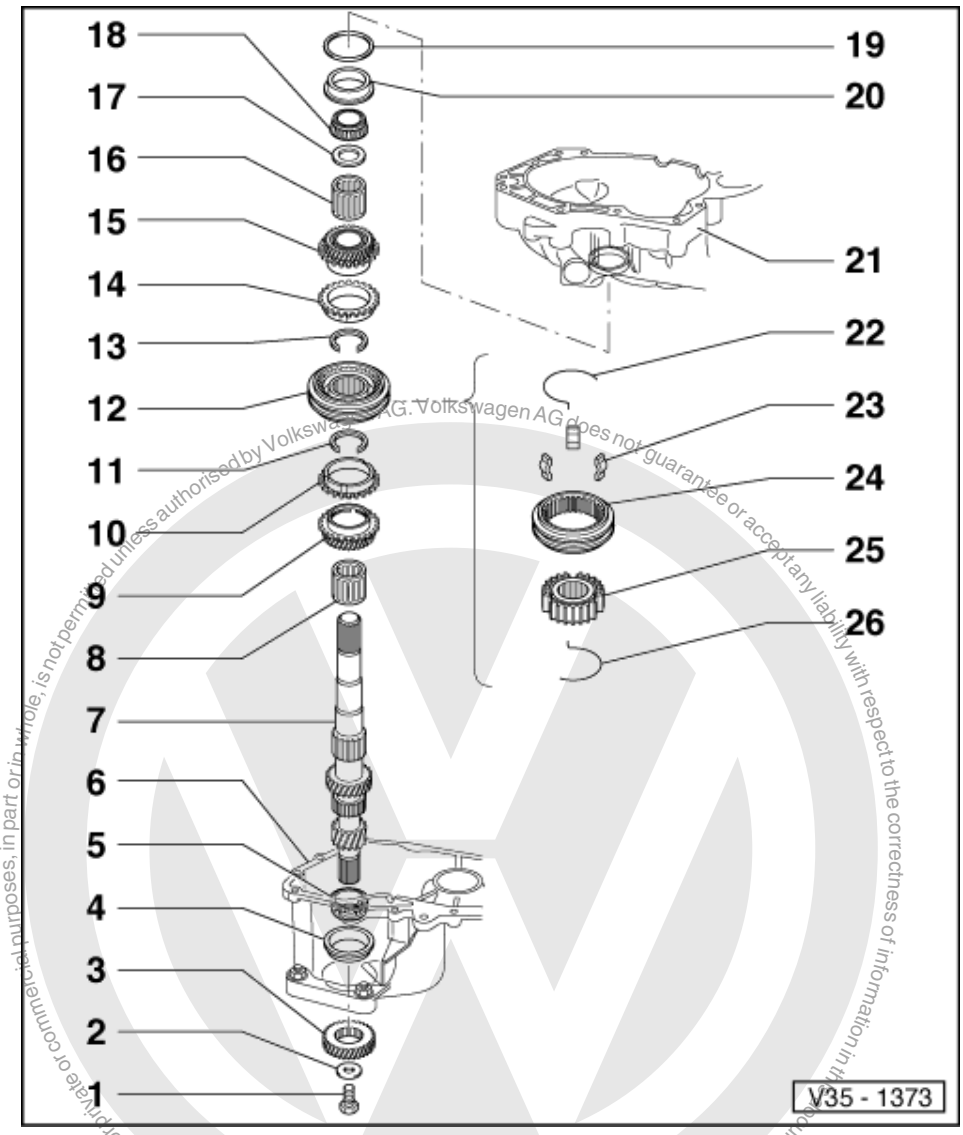


10 3rd gear synchro-ring
- Checking for wear
  => Fig. 10

11 Circlip
- Pressing out => Fig. 7
- Inserting => Fig. 9

12 Locking collar with 3rd and 4th gear synchro-hub
- Parts are paired
- Pressing off => Fig. 8
- Assembling => Fig. 11 and Fig. 12
- Pressing on => Fig.13

13 Circlip
- Pressing out => Fig. 7
- Inserting => Fig. 9

14 4th gear synchro-ring
- Checking for wear
  => Fig. 10

satelettronica

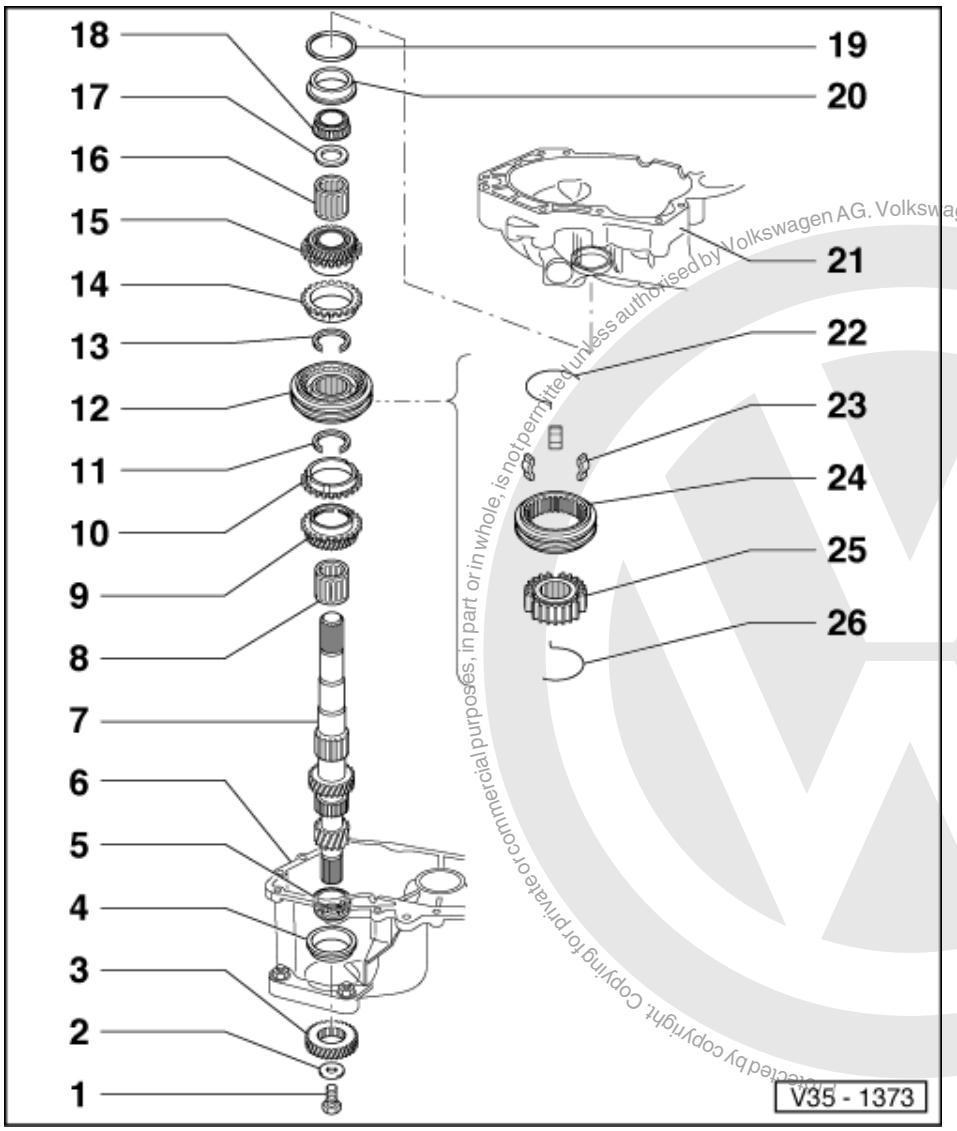


15 Selector gear for 4th gear
16 Needle roller bearing
- Lubricate before inserting

17 Thrust washer
18 Taper roller bearing inner race
- Can be removed without using tools

19 Shim
- Determining thickness => Page 145

20 Taper roller bearing outer race
- Pulling out => Fig. 5
- Pressing in => Fig. 6

21 Clutch housing
22 Spring
- Installation position => Fig. 12

satelettronica
Protected by copyright. Copying for private or commercial purposes, in part or in whole, is not permitted unless authorised by Volkswagen AG. Volkswagen AG does not guarantee or accept any liability with respect to the correctness of information in this document. Copyright by Volkswagen AG.

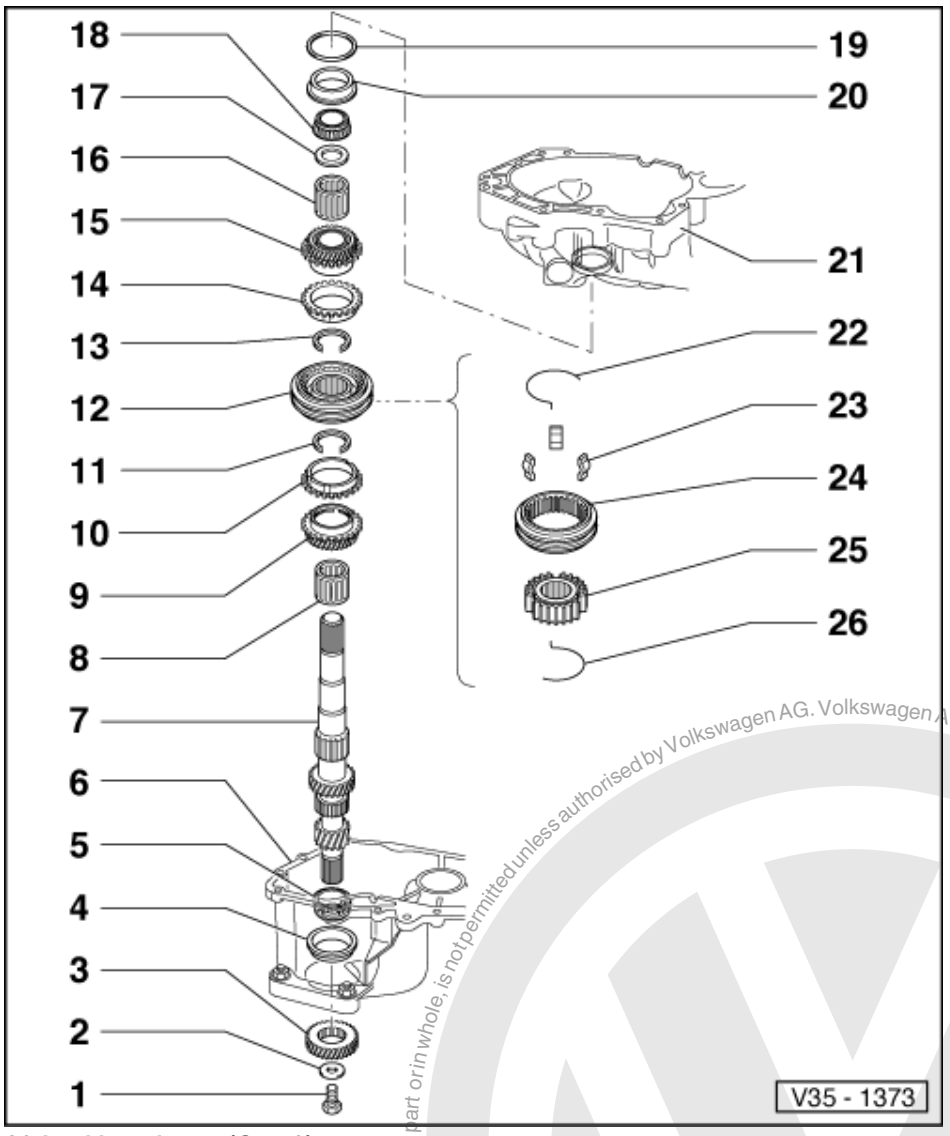


23 Locking pieces (Qty. 3)
24 Locking collar
25 Synchro-hub
26 Spring

- Installation position => Fig. 12

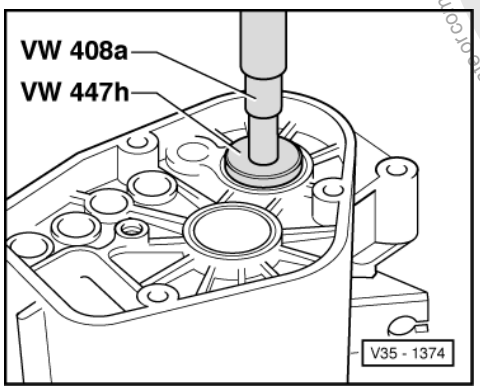


Protected by copyright. Copying for private or commercial purposes, in part or in whole, is not permitted unless authorised by Volkswagen AG. Volkswagen AG does not guarantee or accept any liability with respect to the correctness of information in this document. Copyright by Volkswagen AG.
satelettronica

Protected by copyright. Copyright by Volkswagen AG. Volkswagen AG does not guarantee or accept any liability with respect to the correctness of information in this document. Copying for commercial purposes, in part or in whole, is not permitted unless authorised by Volkswagen AG.

-> Fig.1 Pressing out taper roller bearing outer race

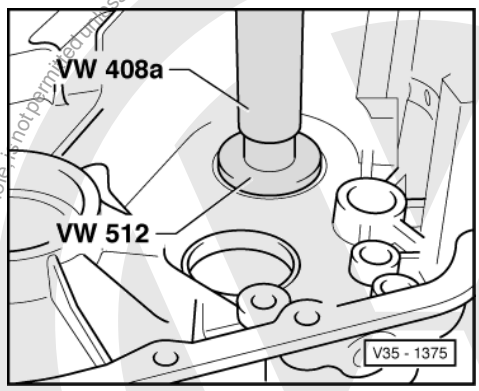


-> Fig.2 Pressing in taper roller bearing outer race

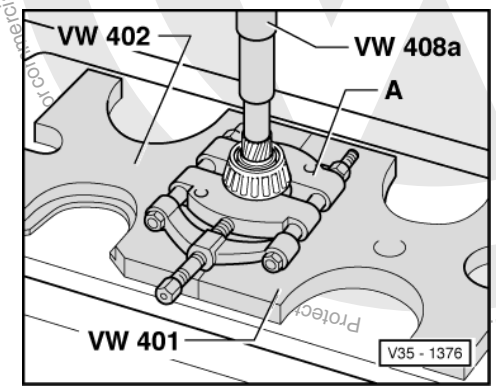


-> Fig.3 Pulling off small taper roller bearing inner race

A - Separating device 22 ... 115 mm, e.g. Kukko 17/2

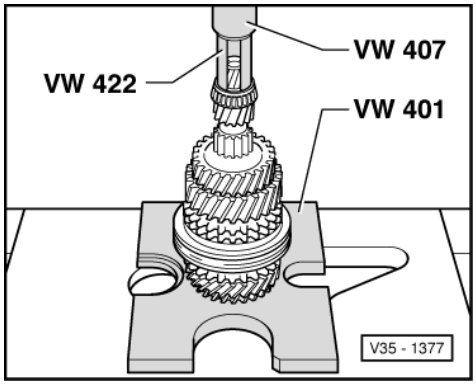


-> Fig.4 Pressing on small taper roller bearing inner race

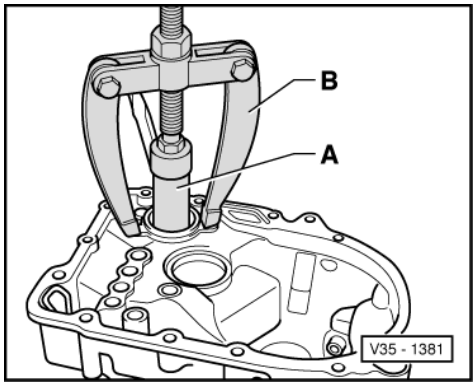


satelettronica

-> Fig.5 Pulling out taper roller bearing outer race

A - Internal extractor 37 ... 46 mm, e.g. Kukko 21/6

B - Counter support, e.g. Kukko 22/2

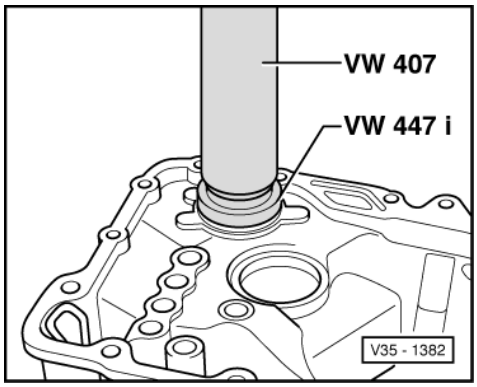


-> Fig.6 Pressing in taper roller bearing outer race

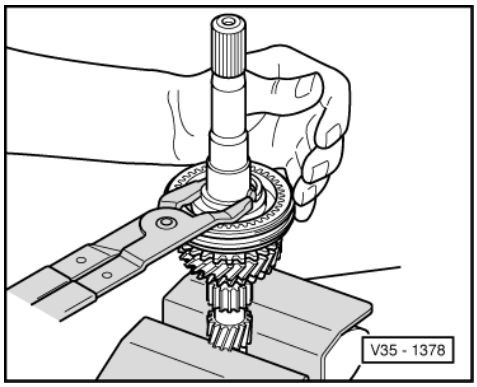


-> Fig.7 Pressing circlip out of groove

Warning!
Prevent uncontrolled springing of circlip. Danger of accident!

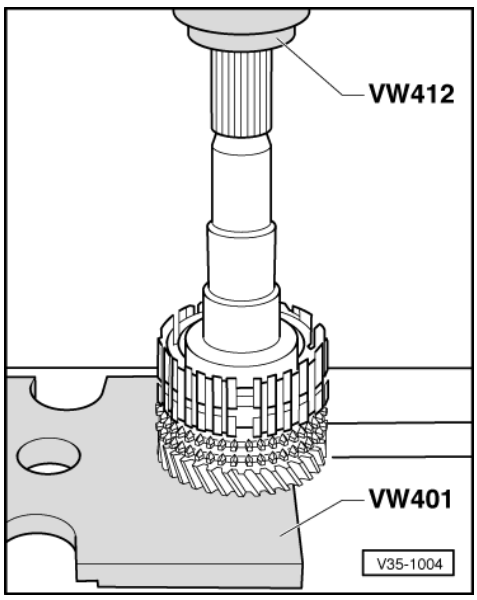


Protected by copyright. Copying for private or commercial purposes, in part or in whole, is not permitted unless authorised by Volkswagen AG. Volkswagen AG does not guarantee or accept any liability with respect to the correctness of information in this document. Copyright by Volkswagen AG.
satelettronica

-> Fig.8 Pressing off synchro-hub

- After removing securing ring press off synchro-hub and 3rd selector gear.

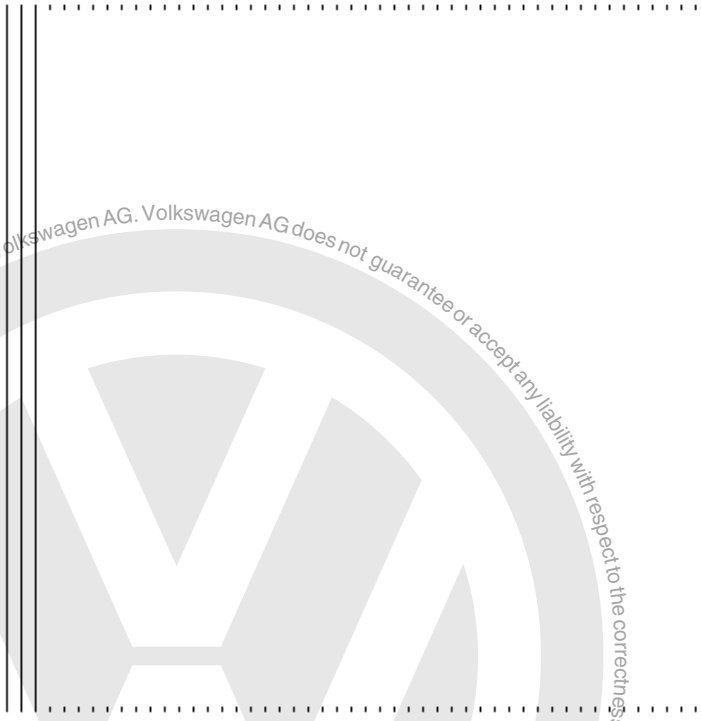

-> Fig.9 Inserting circlip

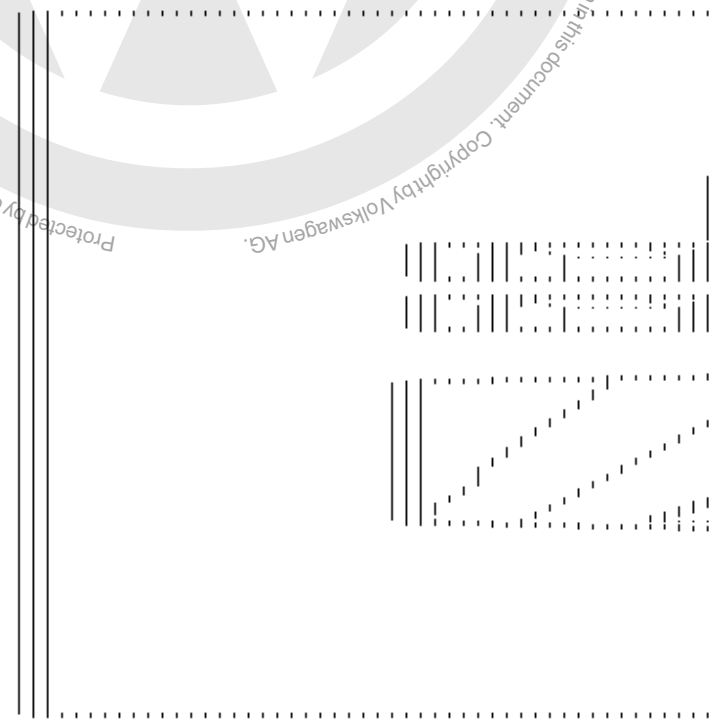

Protected by copyright. Copying for private or commercial purposes, in part or in whole, is not permitted unless authorised by Volkswagen AG. Volkswagen AG does not guarantee or accept any liability with respect to the correctness of information in this document. Copyright by Volkswagen AG.

satelettronica

Protected by copyright. Copying for private or commercial purposes, in part or in whole, is not permitted unless authorised by Volkswagen AG. Volkswagen AG does not guarantee or accept any liability with respect to the correctness of information in this document. Copyright by Volkswagen AG.

**-> Fig.10 Checking synchro-ring for wear**

- Press synchro-ring onto the gear cone and measure gap "a" with feeler gauge.

| Gap "a" | New dimension | Wear limit |
|---|---|---|
| 3rd and 4th gear | 1.1 ... 1.7 mm | 0.5 mm |

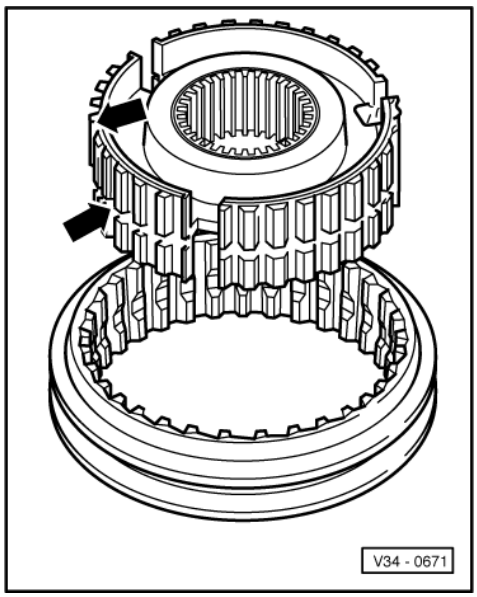


**-> Fig.11 Assembling locking collar and synchro-hub for 3rd and 4th gear**

Installation position:

Short splines below circumferal groove (lower arrow) face 3rd gear.

Groove on end face (upper arrow) face 4th gear.

satelettronica

-> Fig.12 Locking collar/synchro-hub assembled

- Locking collar is pushed over synchro-hub.

- Insert locking pieces and install springs 120° off-set. The angled end of the spring must locate in the hollow locking piece.

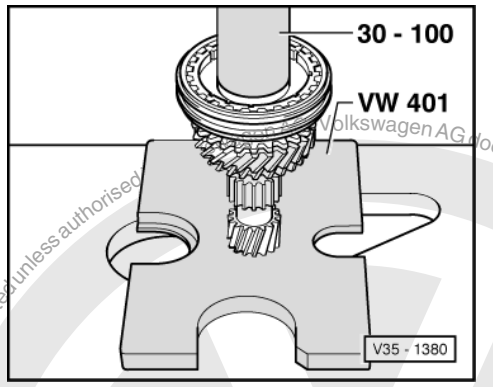


-> Fig.13 Pressing on 3rd and 4th gear synchro-hub with locking collar

# 2 - Adjusting input shaft

## 2.1 - Adjusting input shaft

(Determining thickness of shim for input shaft)

It is only necessary to readjust the input shaft when

- Gearbox housing
- Clutch housing
- Input shaft

or the

- Taper roller bearings

is renewed.

Adjustment overview => Page 180

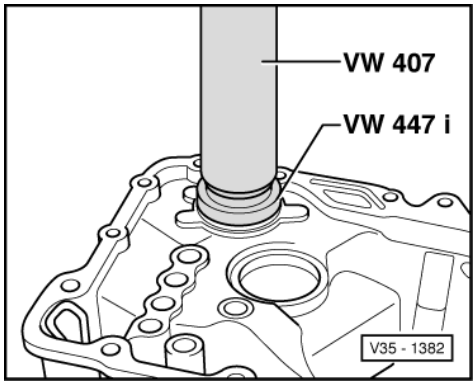


- -> Press taper roller bearing outer race, without shim, into gearbox housing onto stop.

Volkswagen AG does not guarantee or accept any liability with respect to the correctness of information in this document. Copyright by Volkswagen AG. Protected by copyright. Copying for private or commercial purposes, in part or in whole, is not permitted unless authorised.
satelettronica

- Install input shaft in gearbox housing and assemble clutch housing. Tighten hexagon head bolts to 25 Nm.

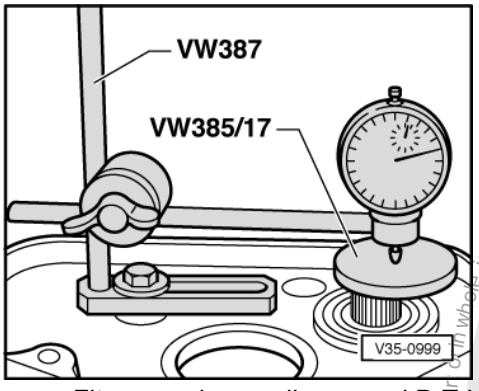


- -> Fit measuring appliance and D.T.I. (3 mm measuring range).
- Before taking any measurements, rotate input shaft to allow bearings to settle. Set dial gauge to "O" with 1 mm preload.

***Note:***

*This preparation is to be repeated for each subsequent measurement, otherwise the gauge will not return to the starting position.*

- Press input shaft in direction of D.T.I.
- Read off and note clearance indicated on D.T.I. (example 1.21).

***Note:***

*D.T.I. does not return to original position.*

- Determine thickness of shim from table => Page 146 .
- Remove input shaft and pull taper roller bearing outer race out of clutch housing => Page 136 .

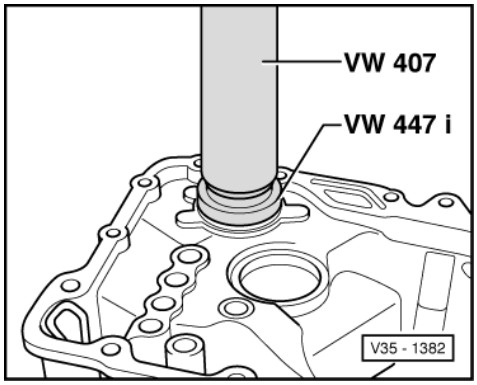


- -> Press taper roller bearing outer race together with selected shim (in example 1.20 mm) into clutch housing.
- Insert input shaft into gearbox housing and assemble clutch housing and tighten hexagon head bolts to 25 Nm.

Table of shims

| Measured | Shim | |
|---|---|---|
| measured value (mm) | Thickness (mm) | Part No. |
| ... 0.68 | 0.65 | 085 311 391 |
| 0.68 ... 0.73 | 0.70 | 085 311 391 A |
| 0.74 ... 0.78 | 0.75 | 085 311 391 B |
| 0.79 ... 0.83 | 0.80 | 085 311 391 C |
| 0.84 ... 0.88 | 0.85 | 085 311 391 D |
| 0.89 ... 0.93 | 0.90 | 085 311 391 E |

Copyright by Volkswagen AG. Volkswagen AG does not guarantee or accept any liability with respect to the correctness of information in this document. Copying for private or commercial purposes, in part or in whole, is not permitted unless authorised by Volkswagen AG.
satelettronica

| Measured | Shim | |
|---|---|---|
| 0.94 ... 0.98 | 0.95 | 085 311 391 F |
| 0.99 ... 1.03 | 1.00 | 085 311 391 G |
| 1.04 ... 1.08 | 1.05 | 085 311 391 H |
| 1.09 ... 1.13 | 1.10 | 085 311 391 I |
| 1.14 ... 1.18 | 1.15 | 085 311 391 K |
| 1.19 ... 1.23 | 1.20 | 085 311 391 L |
| 1.24 ... 1.28 | 1.25 | 085 311 391 M |
| 1.29 ... 1.33 | 0.65 + 0.65 | 085 311 391/391 |
| 1.34 ... 1.38 | 0.65 + 0.70 | 085 311 391 + A |
| 1.39 ... 1.43 | 0.70 + 0.70 | 085 311 391 A + A |
| 1.44 ... 1.48 | 0.70 + 0.75 | 085 311 391 A + B |
| 1.49 ... 1.53 | 0.75 + 0.75 | 085 311 391 B + B |
| 1.54 ... 1.58 | 0.75 + 0.80 | 085 311 391 B + C |
| 1.59 ... 1.63 | 0.80 + 0.80 | 085 311 391 C + C |
| 1.64 ... 1.68 | 0.80 + 0.85 | 085 311 391 C + D |
| 1.69 ... 1.75 | 0.85 + 0.85 | 085 311 391 D + D |

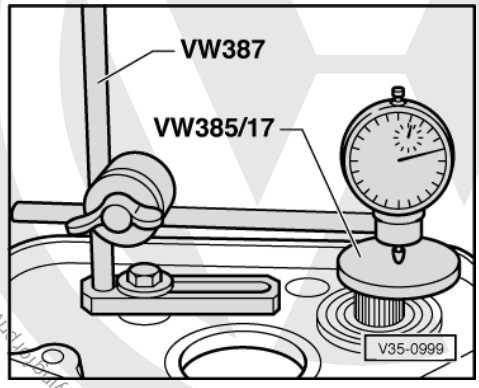


Carrying out check measurement

- -> Install measuring appliance and D.T.I.
- Rotate input shaft so that the taper roller bearings settle.
- Zero D.T.I. with 1 mm of preload.
- Press input shaft in direction of D.T.I.
- Bearing play should be min. 0.01 ... max. 0.12 mm.

*Note:*

*If the bearing clearance cannot be measured, but input shaft play is perceptible and the input shaft turns freely, the adjustment is acceptable.*

- Frictional moment max. 20 Ncm.

satelettronica

# 3 - Dismantling and assembling output shaft

## 3.1 - Dismantling and assembling output shaft

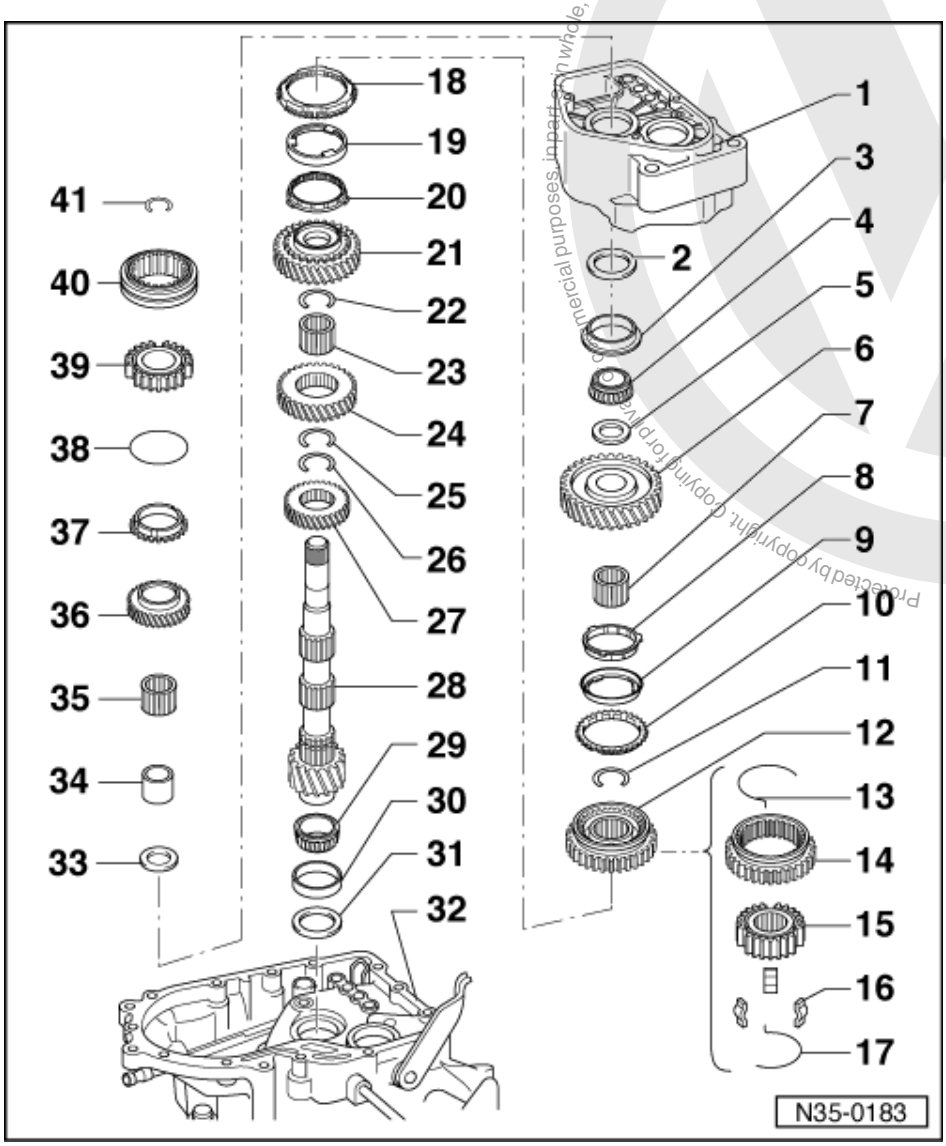


*Notes:*

- When installing new gears or a new output shaft consult technical data =>Page 2 .
- If the output shaft or taper roller bearings have been renewed then carry out output shaft adjustment => Page 163 .

1 Gearbox housing
- Due to the new washer (item 2 ) the bearing seat for the taper roller bearing outer race has been made deeper by 1 mm from build date 08 07 7. This does not apply to gearbox "DQW"

2 Washer
- Always 1 mm thick
- Installed from gearbox build date 08 07 7, not applicable for gearbox "DQW"

Protected by copyright. Copying for private or commercial purposes, in part or in whole, is not permitted unless authorised by Volkswagen AG. Volkswagen AG does not guarantee or accept any liability with respect to the correctness of information in this document. Copyright by Volkswagen AG.
satelettronica

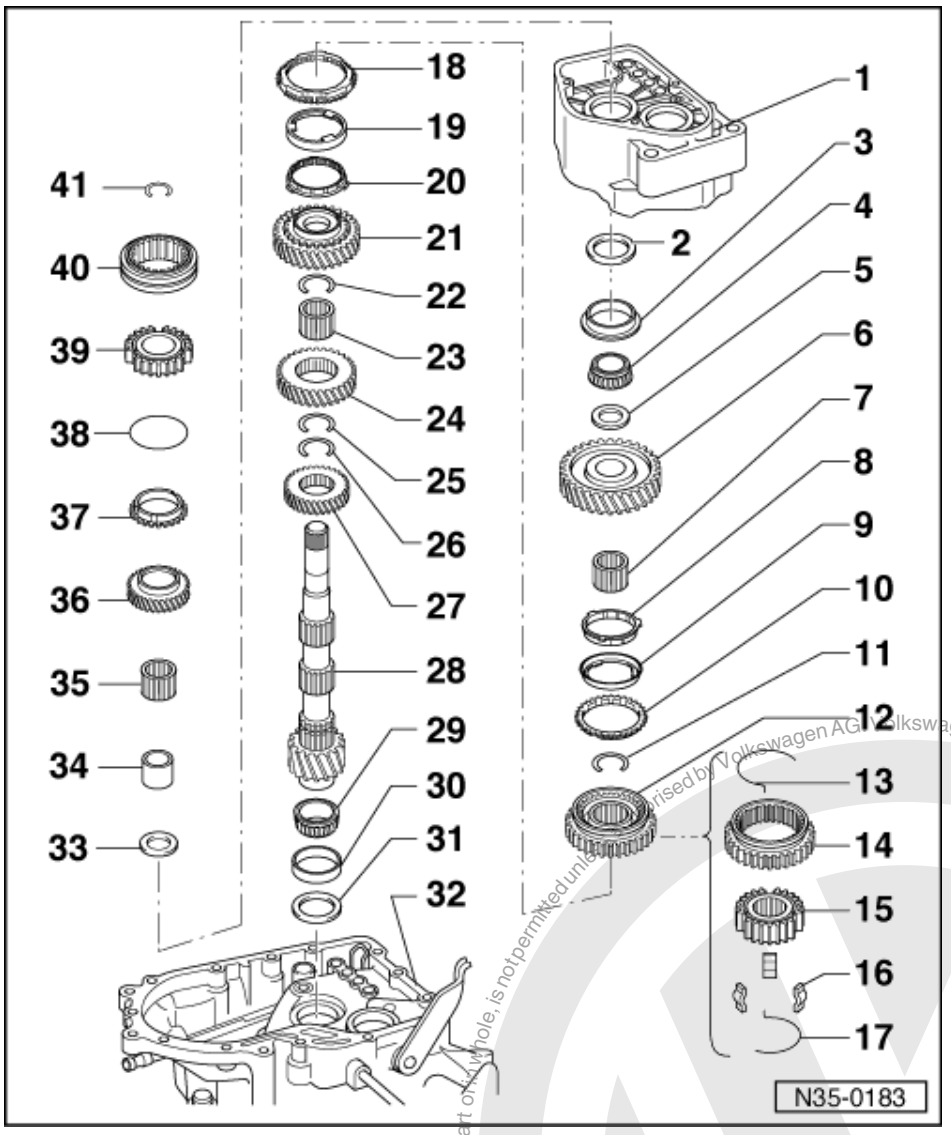


3 Outer race/taper roller bearing
- Pressing out of gearbox housing with output shaft => Page 117
- Pressing in => Fig. 1

4 Taper roller bearing inner race
- Pressing off with 1st selector gear => Fig. 2
- Pressing on => Fig.19

5 Thrust washer

6 1st selector gear
- Installation position => Fig. 18

7 Needle roller bearing
- For 1st gear

8 Synchro-ring
- (1st gear inner ring)
- Checking for wear => Fig. 10
- Check lugs for scoring
- Installation position => Fig. 17

Protected by copyright. Copying for private or commercial purposes, in part or in whole, is not permitted unless authorised by Volkswagen AG. Volkswagen AG does not guarantee or accept any liability with respect to the correctness of information in this document. Copyright by Volkswagen AG.
satelettronica

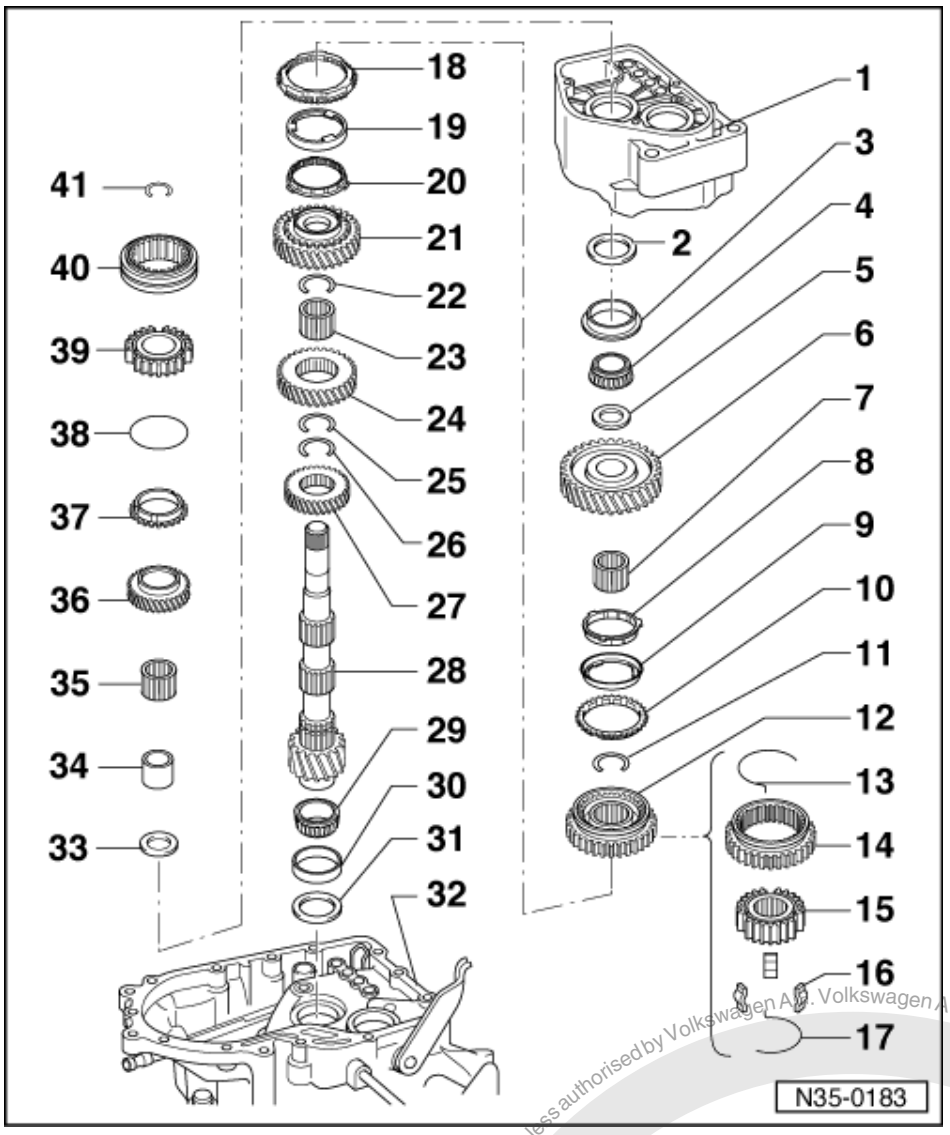


9 1st gear outer ring
- Insert in the synchro-ring (item 10 ), installation position => Fig. 16
- Renew if scored

10 1st gear synchro-ring
- Checking for wear
  => Fig. 11
- Assemble so that the recesses locate in the locking collar (item 12 ) locking pieces

11 Circlip
- Pressing out => Fig. 3
- Inserting => Fig. 9

12 1st and 2nd gear locking collar with synchro-hub
- Parts are paired
- Pressing off => Fig. 4
- Assembling locking collar/synchro-hub => Fig. 13 and Fig. 14
- Pressing on => Fig. 15

Protected by copyright. Copying for private or commercial purposes, in part or in whole, is not permitted unless authorised by Volkswagen AG. Volkswagen AG does not guarantee or accept any liability with respect to the correctness of information in this document. Copyright by Volkswagen AG.
satelettronica

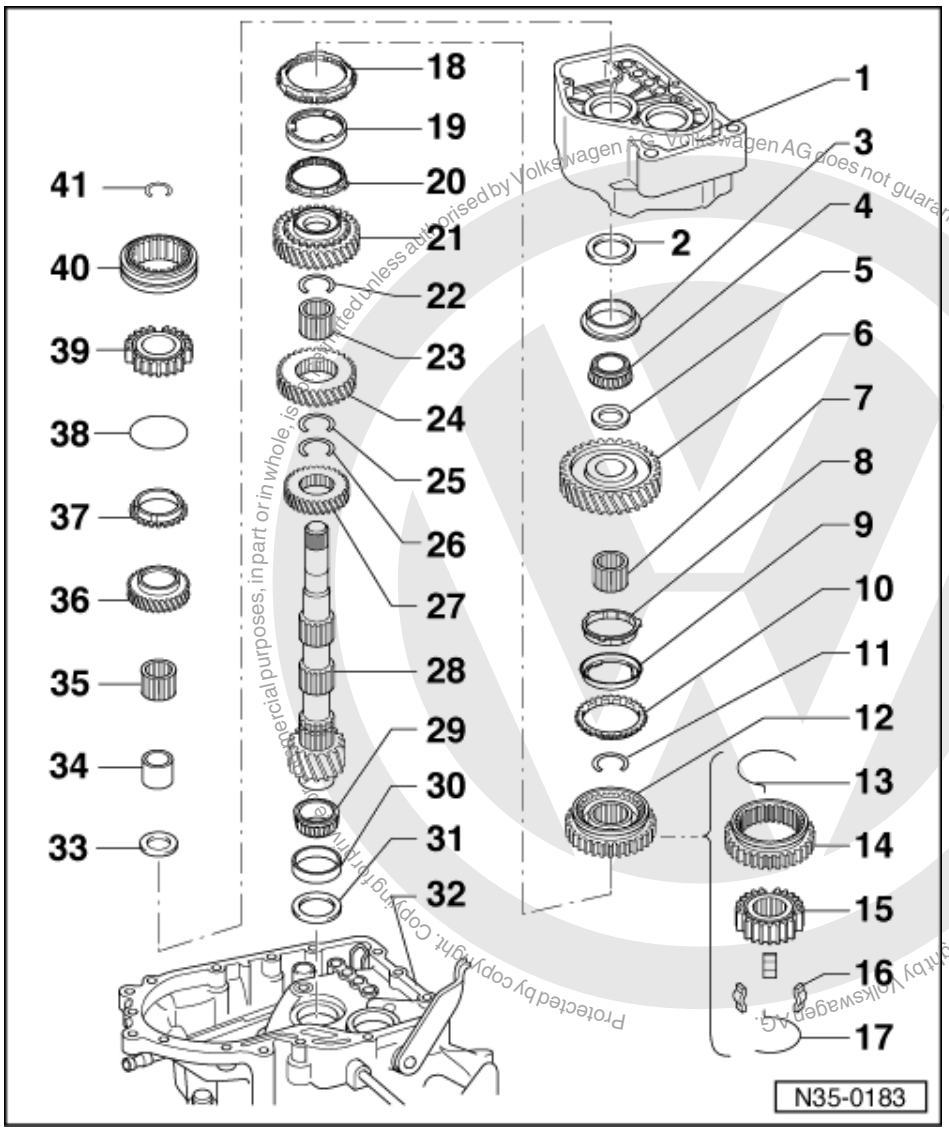


13 Spring
14 Locking collar
15 Synchro-hub
16 Locking pieces (Qty. 3)
17 Spring
18 2nd gear synchro-ring
- Checking for wear => Fig. 11
- Installation position => Fig. 12

19 2nd gear outer ring
- Insert in the synchro-ring (item 20 )
- Installation position => Fig. 12
- Renew if scored

satelettronica

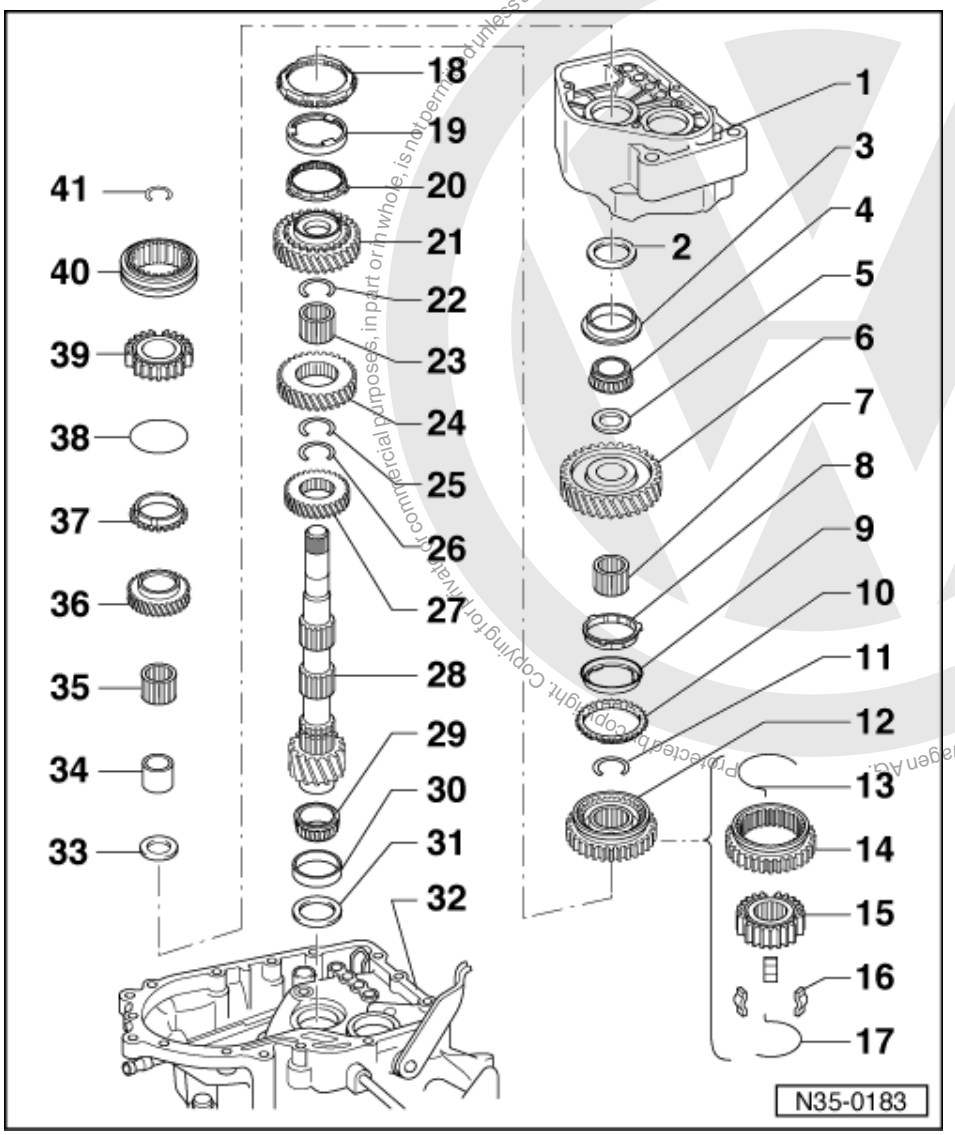


20 Synchro-ring
- (2nd gear inner ring)
- Checking for wear
  => Fig. 10
- Check lugs for scoring
- Installation position => Fig. 12

21 2nd gear

22 Circlip
- Pressing out => Fig. 3
- Inserting => Fig. 9

23 Needle roller bearing
- For 2nd gear

24 3rd gear

25 Circlip
- Pressing out => Fig. 3
- Inserting => Fig. 9

26 Circlip
- Pressing out => Fig. 3
- Inserting => Fig. 9

Protected by copyright. Copying for private or commercial purposes, in part or in whole, is not permitted unless authorised by Volkswagen AG. Volkswagen AG does not guarantee or accept any liability with respect to the correctness of information in this document. Copyright by Volkswagen AG.
satelettronica

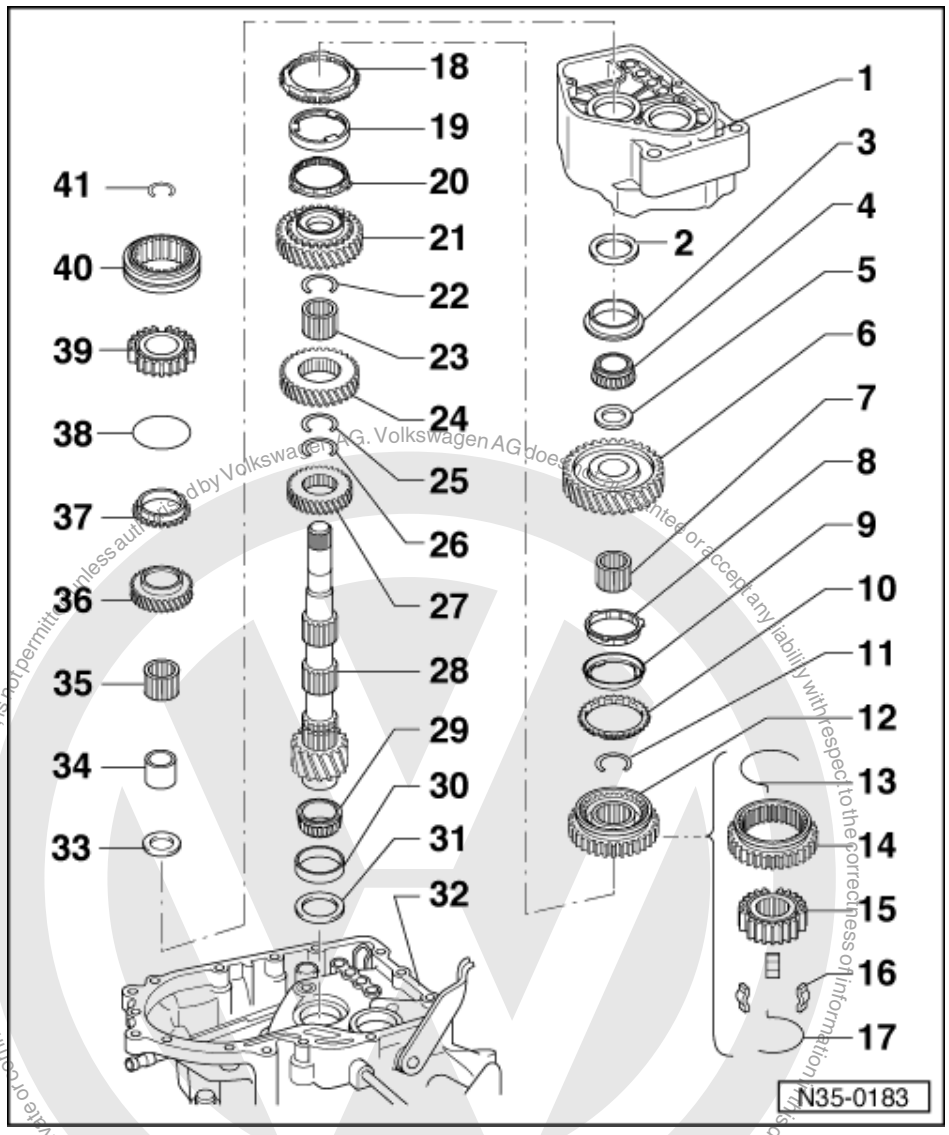


27 4th gear
- Marked groove points towards final drive teeth

28 Output shaft
- Ensure correct ratio (number of teeth) => Page 2.
- Adjusting => Page 163

29 Taper roller bearing inner race
- Pulling off => Fig. 5
- Pressing on => Fig. 6

30 Outer race/taper roller bearing
- Removing => Fig. 7
- Pressing in => Fig. 8

31 Shim
- For output shaft
- Determining thickness => Page 163

32 Clutch housing

satelettronica

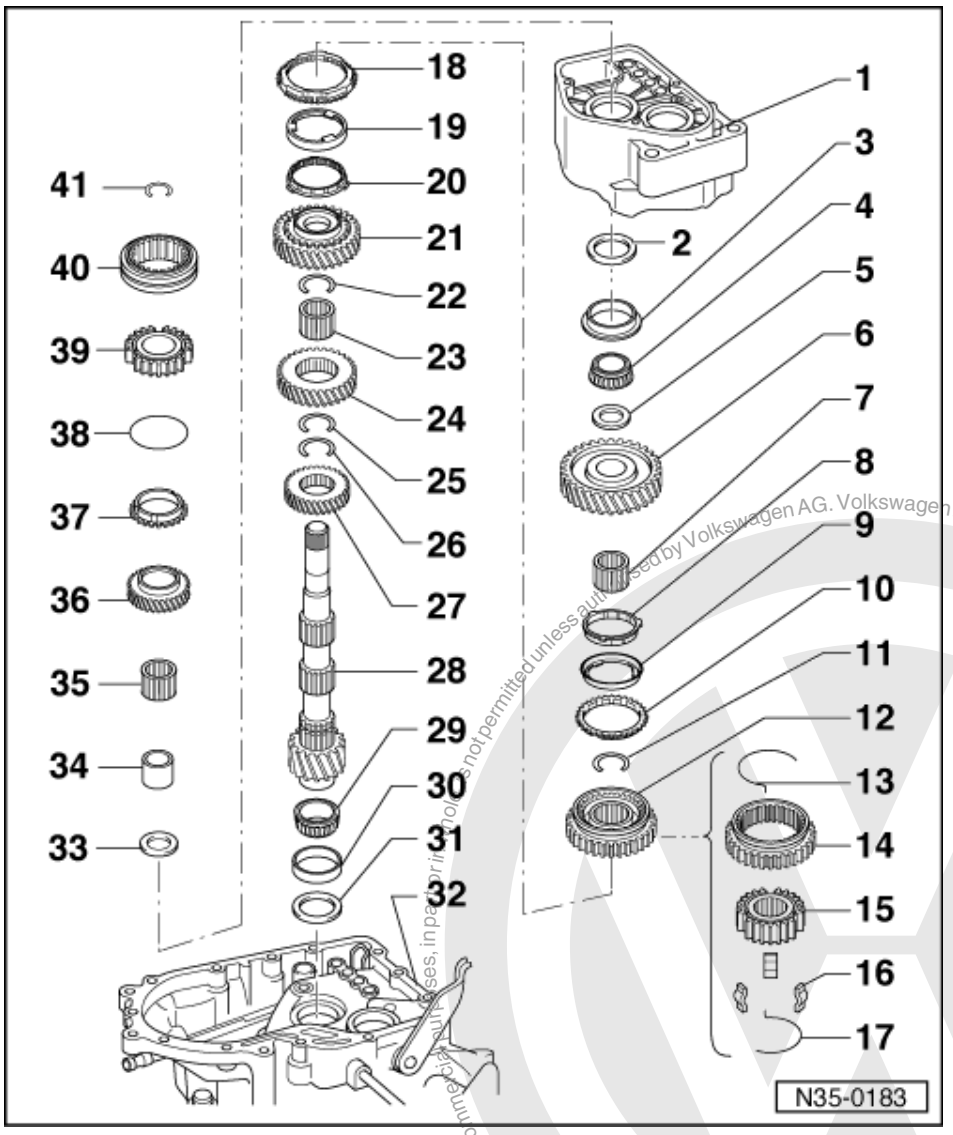


33 Thrust washer
- Shoulder on thrust washer faces taper roller bearing

34 Sleeve for needle roller bearing
- Pressing off with 1st selector gear => Fig. 2
- Driving on => Page 121

35 5th selector gear needle roller bearing

36 Selector gear for 5th gear

37 5th gear synchro-ring

38 Spring
- Insert onto 5th gear synchro-ring
- Renew when worn

39 5th gear synchro-hub
- Removing => from Page 111

Protected by copyright. Copying for private or commercial purposes, in part or in whole is not permitted unless authorised by Volkswagen AG. Volkswagen AG does not guarantee or accept any liability with respect to the correctness of information in this document. Copyright by Volkswagen AG.
satelettronica

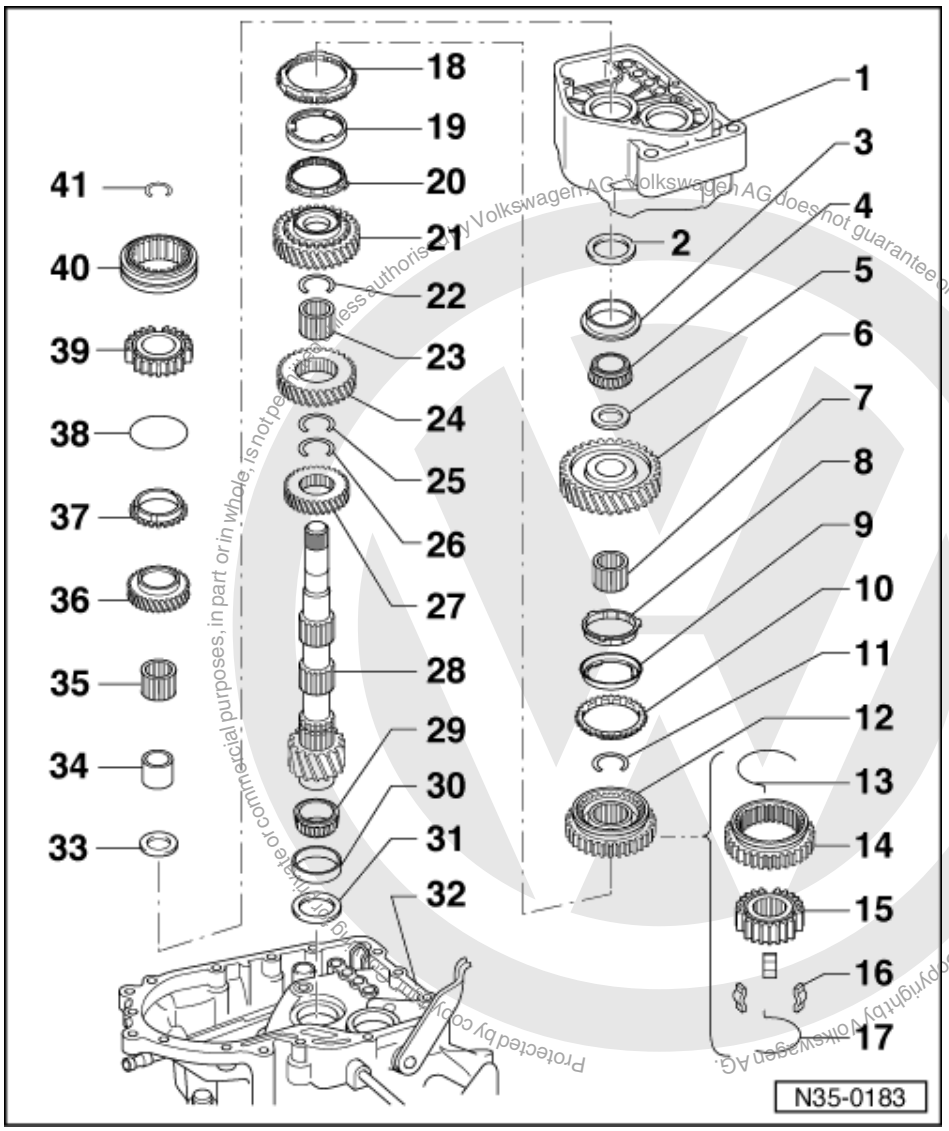


40 5th gear locking collar

- Removing => from Page 111

41 Circlip

- Always renew
- Determining thickness => Page 122

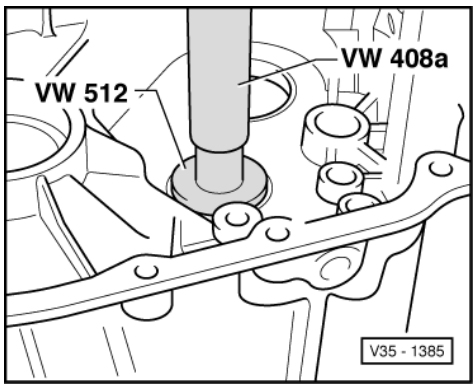


satelettronica

-> Fig.1 Pressing in taper roller bearing outer race

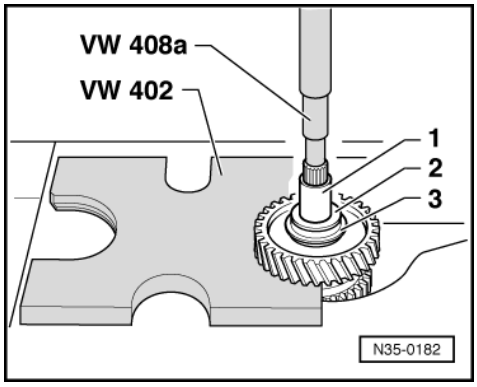


-> Fig.2 Pressing off 1st gear sliding wheel with sleeve -1-, thrust washer -2-, taper roller inner/outer race -3-

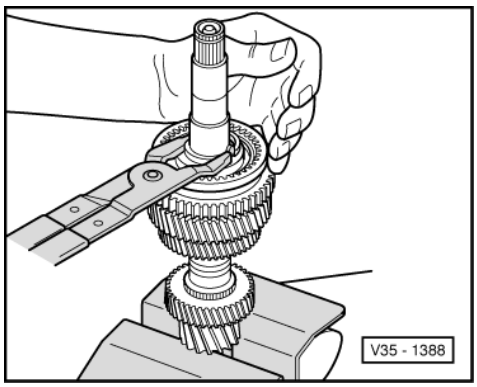


-> Fig.3 Pressing circlip out of groove

Warning!
Prevent uncontrolled springing of circlip. Danger of accident!

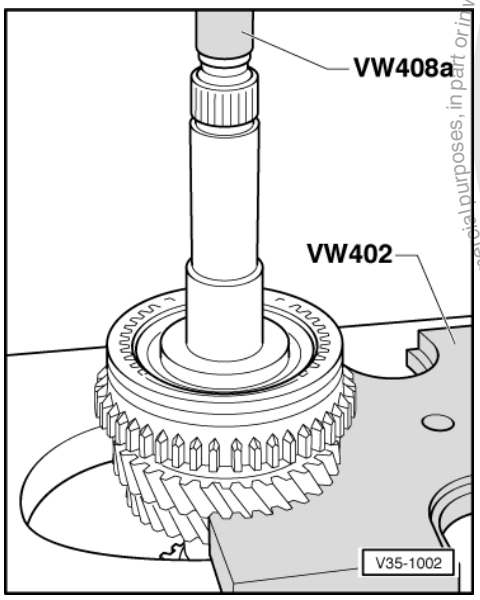


satelettronica
Protected by copyright. Copying for private or commercial purposes, in part or in whole, is not permitted unless authorised by Volkswagen AG. Volkswagen AG does not guarantee or accept any liability with respect to the correctness of information in this document. Copyright by Volkswagen AG.

-> Fig.4 Pressing off 1st and 2nd gear locking collar and synchro-hub

After removing securing ring press 2nd selector gear and locking collar/synchro-hub off together.

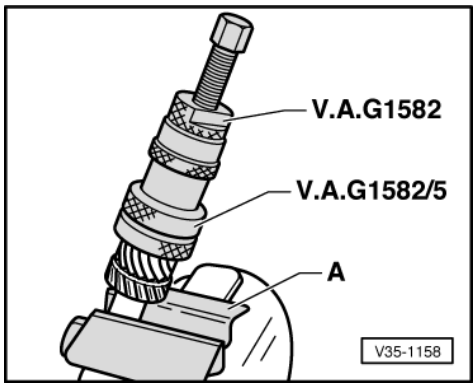


-> Fig.5 Pulling off small taper roller bearing inner race

A - Vice clamps/vice

- Fit gripping device and tension behind bearing rollers, then turn bearing and retension gripping device.

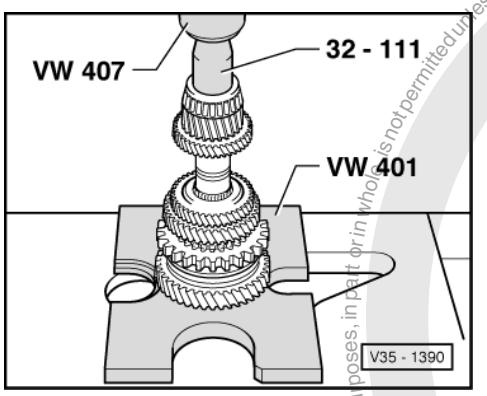


-> Fig.6 Pressing on taper roller bearing inner race

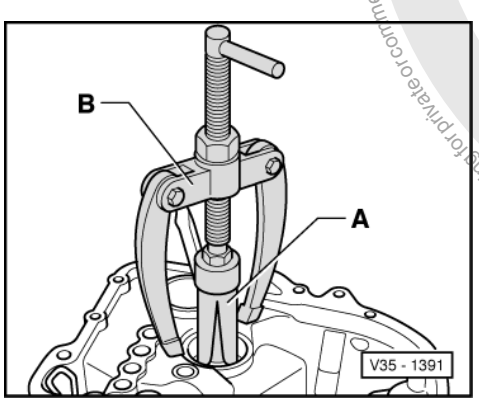


-> Fig.7 Pulling taper roller bearing outer race out of clutch housing

A - Internal extractor, e.g. Kukko 21/6, 37 ... 46 mm

Protected by copyright. Copying for private or commercial purposes, in part or in whole, is not permitted unless authorised by Volkswagen AG. Volkswagen AG does not guarantee or accept any liability with respect to the correctness of information in this document. Copyright by Volkswagen AG.
satelettronica

B - Counter support, e.g. Kukko 22/2

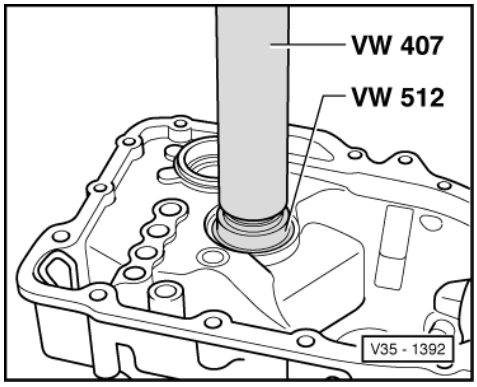


-> Fig.8 Pressing in taper roller bearing outer race

Protected by copyright. Copying for private or commercial purposes, in part or in whole, is not permitted unless authorised by Volkswagen AG. Volkswagen AG does not guarantee or accept any liability with respect to the correctness of information in this document. Copyright by Volkswagen AG.

satelettronica

-> Fig.9 Inserting circlip

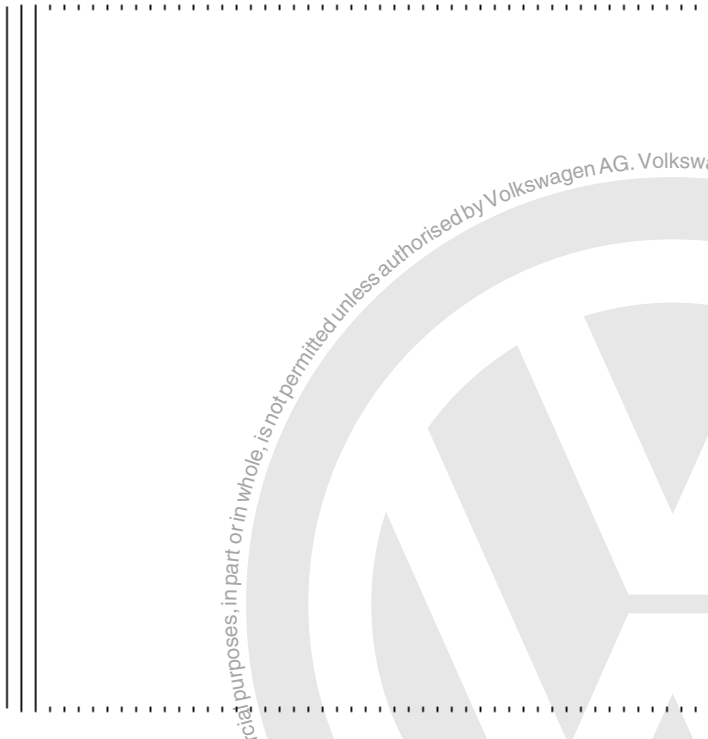

-> Fig.10 Checking 1st and 2nd gear inner-ring for wear

- Press inner ring onto 2nd selector gear cone and measure gap "a" with a feeler gauge.

| Gap "a" | New dimension | Wear limit |
|---|---|---|
| 1st and 2nd gear | 0.75 ... 1.25 mm | 0.3 mm |

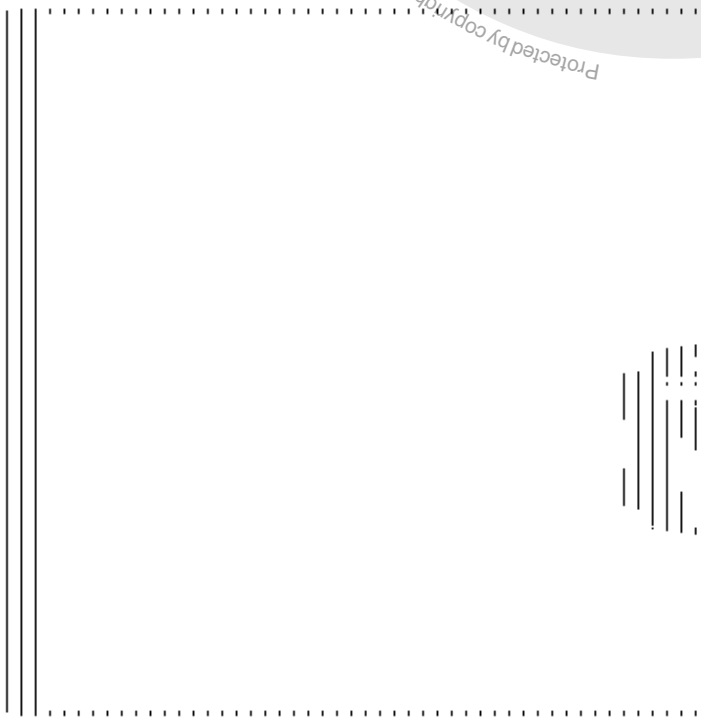

Protected by copyright. Copyright by Volkswagen AG. Volkswagen AG does not guarantee or accept any liability with respect to the correctness of information in this document. Copyright by Volkswagen AG. Commercial purposes, in part or in whole, is not permitted unless authorised by Volkswagen AG.
satelettronica

-> Fig.11 Checking 1st and 2nd gear synchro-ring for wear

- Press synchro-ring, outer-ring and inner-ring onto selector gear cone and measure gap "a" with feeler gauge.

| Gap "a" | New dimension | Wear limit |
|---|---|---|
| 1st and 2nd gear | 1.2 ... 1.8 mm | 0.5 mm |

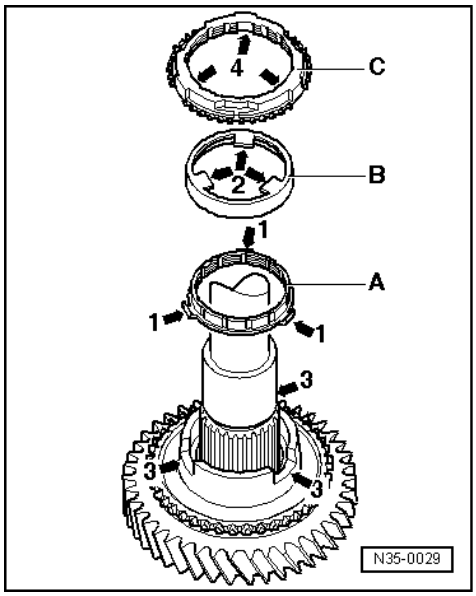


-> Fig.12 Installation position of outer-ring, inner ring and 2nd gear synchro-ring

- Place inner ring -A- on 2nd selector gear.

The angled lugs (arrow 1) point towards outer ring -B-.

- Fit outer ring -B-.

The lugs (arrow 2) engage in the selector gear recesses (arrow 3).

- Fit synchro-ring -C-.

The grooves (arrow 4) engage in the inner ring -A- lugs (arrow 1).

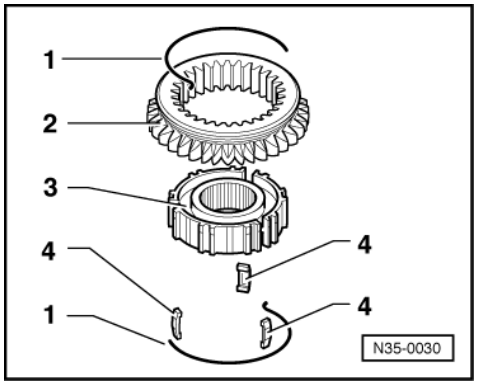


-> Fig.13 Dismantling and assembling 1st and 2nd gear synchro-hub and locking collar

1 - Spring
2 - Locking collar
3 - Synchro-hub

Protected by copyright. Copying for private or commercial purposes, in part or in whole, is not permitted unless authorised by Volkswagen AG. Volkswagen AG does not guarantee or accept any liability with respect to the correctness of information in this document. Copyright by Volkswagen AG.
satelettronica

4 - Locking piece

- Slide locking collar over synchro-hub.

The small recesses for locking pieces in synchro-hub and locking collar must align with one another.

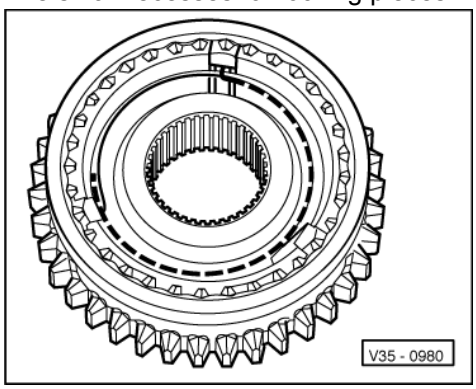


**-> Fig.14 Assembling 1st and 2nd gear locking collar/synchro-hub**

The locking collar has been pushed over the synchro-hub.

- Insert locking pieces into small recesses and install springs 120° off-set. The angled end of the spring must locate in the hollow locking piece.

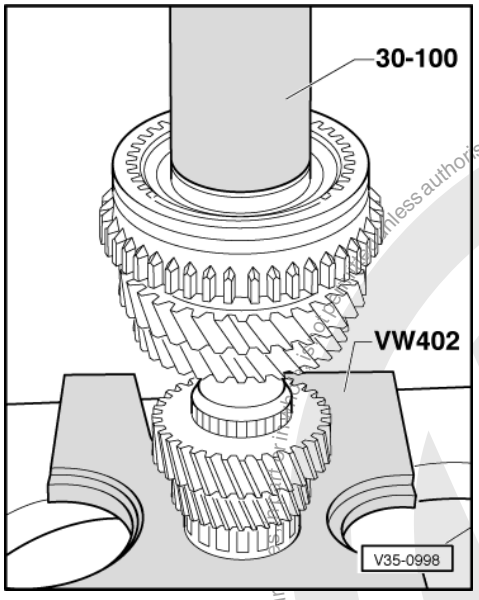


**-> Fig.15 Pressing on locking collar/synchro-hub**

Installation position:
Locking collar groove for selector fork towards 1st gear, the teeth for reverse gear towards 2nd gear.
Turn synchro ring so that the grooves align with the locking pieces.

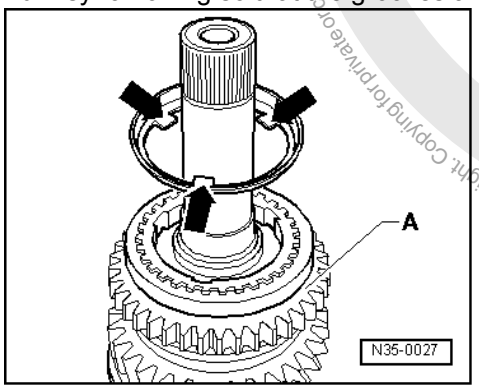


Protected by copyright. Copying for private or commercial purposes, in part or in whole, is not permitted unless authorised by Volkswagen AG. Volkswagen AG does not guarantee or accept any liability with respect to the correctness of information in this document. Copyright by Volkswagen AG.
satelettronica

-> Fig.16 Installation position for 1st gear outer-ring

The lugs (arrows) face towards reverse gear -A-.

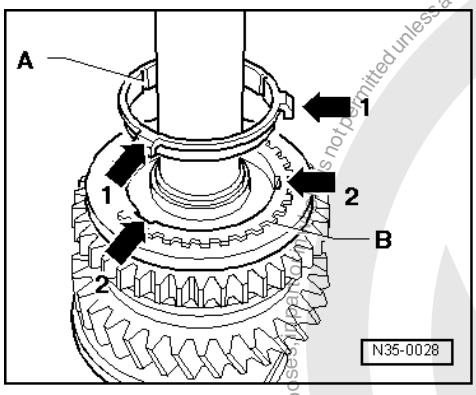


-> Fig.17 Installation position synchro-ring -A- 1st gear (inner ring)

The lugs (arrow 1) locate in the recesses (arrow 2) in the synchro-ring -B-.

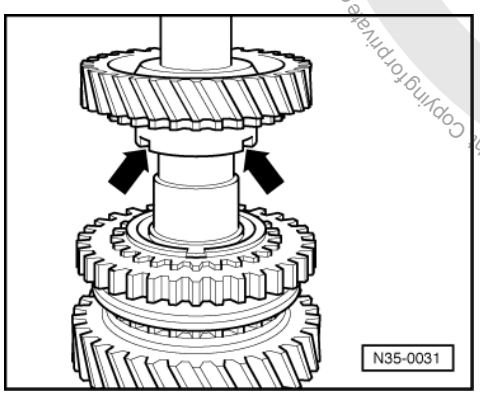


-> Fig.18 Installation position 1st selector gear

The recesses in the shoulder (arrows) locate in the lugs of the outer-ring (arrows => Fig. 16 )

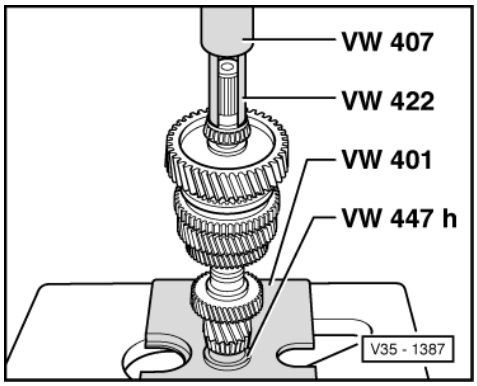


Protected by copyright. Copying for private or commercial purposes is not permitted unless authorised by Volkswagen AG. Volkswagen AG does not guarantee or accept any liability with respect to the correctness of information in this document. Copyright by Volkswagen AG.
satelettronica

-> Fig.19 Pressing on taper roller bearing inner race

# 4 - Adjusting output shaft

## 4.1 - Adjusting output shaft

(Determining thickness of output shaft shim)

It is necessary to readjust the output shaft when

- Gearbox housing
- Clutch housing
- Output shaft

or

- Taper roller bearing

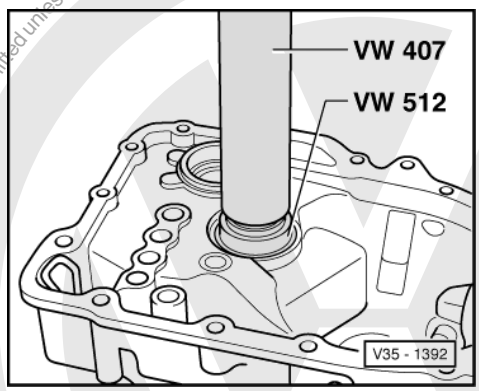


have been changed.

Adjustment overview => Page 180

- -> Press small taper roller bearing outer race together with a 0.75 mm thick shim fully into clutch housing. Insert output shaft into clutch housing and assemble gearbox housing. Tighten hexagon bolts to 25 Nm.

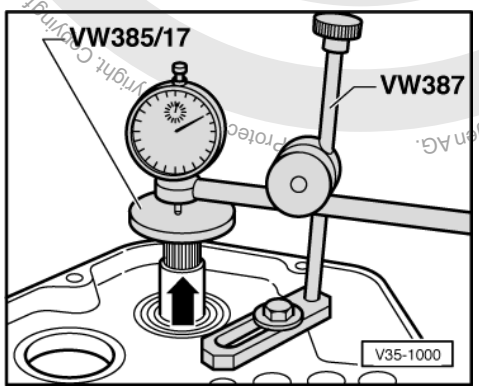


- -> Fit measuring appliance and D.T.I. (3 mm measuring range).
- Before taking any measurements rotate output shaft to allow bearing to settle. Set D.T.I. to "O" with 1 mm preload.

Copyright by Volkswagen AG. Volkswagen AG does not guarantee or accept any liability with respect to the correctness of information in this document. Copying for private or commercial purposes, in part or in whole, is not permitted unless authorised by Volkswagen AG.
satelettronica

*Note:*

*This preparation is to be repeated for each subsequent measurement, otherwise the gauge will not return to the starting position.*

- Pull output shaft in direction of arrow. Read off and note play indicated on D.T.I. (example: 0.30 mm).

**Determining thickness of shim**

The specified bearing preload is obtained by adding to the reading obtained
(0.30 mm) and the thickness of the shim installed
(0.75 mm) a preload constant of
(0.20 mm).

Example:

| | |
|---|---|
| Shim installed | 0.75 mm |
| + Reading | 0.30 mm |
| + Preload (constant) | 0.20 mm |
| Thickness of shim | 1.25 mm |

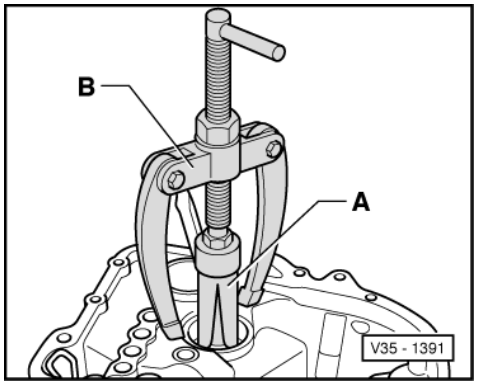


- -> Remove output shaft and pull out small taper roller bearing outer race out of clutch housing.
- Remove inserted shim (0.75 mm thick) from clutch housing.

The following adjustment shims are available:

| Size (mm) | Part No. |
|---|---|
| 0.70 | 020 311 391 Q |
| 0.75 | 020 311 391 |
| 0.80 | 020 311 391 A |
| 0.85 | 020 311 391 B |
| 0.90 | 020 311 391 C |
| 0.95 | 020 311 391 D |
| 1.00 | 020 311 391 E |
| 1.05 | 020 311 391 F |
| 1.10 | 020 311 391 G |
| 1.15 | 020 311 391 H |
| 1.20 | 020 311 391 J |
| 1.25 | 020 311 391 K |
| 1.30 | 020 311 391 L |
| 1.35 | 020 311 391 M |
| 1.40 | 020 311 391 N |

If the size of shim required is larger than that listed in the table, insert two shims totalling the correct figure.

- Press in small taper roller bearing outer race together with the determined shim (in example 1.25 mm) and install output shaft.

Protected by copyright. Copyright by Volkswagen AG.
Copyright by Volkswagen AG. Volkswagen AG does not guarantee or accept any liability with respect to the correctness of information in this document.
Copyright by Volkswagen AG. Copying for private or commercial purposes, in part or in whole, is not permitted unless authorised by Volkswagen AG.
satelettronica

- Fit gearbox housing on and tighten hexagon bolts to 25 Nm.

Checking friction moment

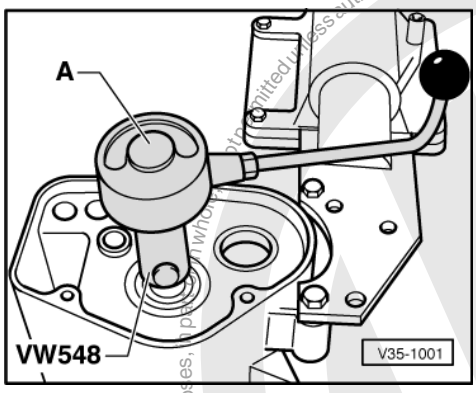


-> A - Commercially available torque gauge 0 ... 600 Ncm

- Clamp clamping piece VW 548. A metal plate (or adhesive tape) must be wrapped around the output shaft to enable the clamp piece VW 548 to be clamped to the output shaft.

For new taper roller bearings the friction moment must be 80 ... 160 Ncm.

For used taper roller bearings the friction torque must be at least 30 Ncm.

***Note:***

*Lubricate bearings with gearbox oil before checking friction moment.*

Protected by copyright. Copyright by Volkswagen AG.
Copying for private or commercial purposes, in part or in whole, is not permitted unless authorised by Volkswagen AG. Volkswagen AG does not guarantee or accept any liability with respect to the correctness of information in this document.
satelettronica

# 39 - Final drive, Differential rear

## 1 - Renewing selector shaft seal with gearbox in situ

### 1.1 - Renewing selector shaft seal with gearbox in situ

- Observe general repair instructions
  => Page 20 .

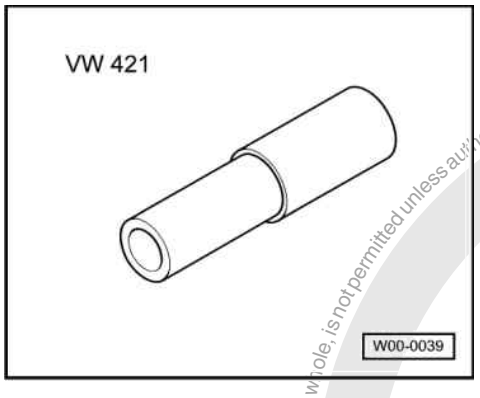


**Special tools, workshop equipment, testers, measuring instruments and auxiliary items required**

- VW 421 Tube

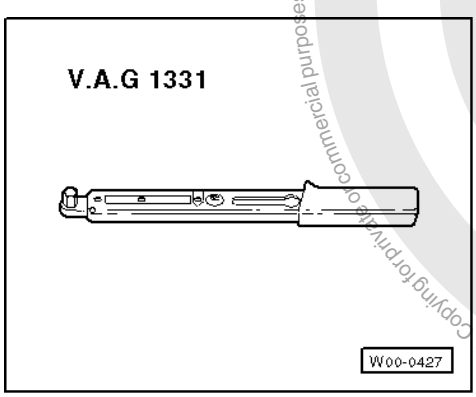


- V.A.G 1331 Torque wrench

**Removing**

- Drain gear oil.
- Remove selector finger.

Rod selector mechanism => from page 56

Cable selector mechanism => from page 76

- Remove selector shaft.
- To prevent damage to the selector shaft, wrap thin layer of insulation tape around it.
- Push selector shaft in onto stop.

Protected by copyright. Copying for private or commercial purposes, in part or in whole, is not permitted unless authorised by Volkswagen AG. Volkswagen AG does not guarantee or accept any liability with respect to the correctness of information in this document. Copyright by Volkswagen AG.
satelettronica

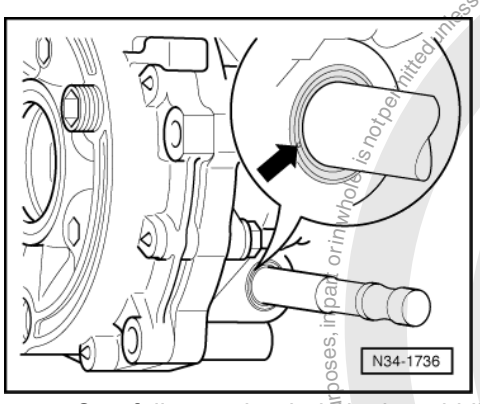


- -> Carefully punch a hole in the middle of the seal (arrow) using a small screwdriver.
- Then lever out the seal using a slightly larger screwdriver.
- Remove insulation tape and check selector shaft for damage.

### Installing

- Lightly oil outer circumference of oil seal.
- Fill space between sealing lip and dust lip with grease G 052 128 A1.
- Carefully push seal over chamfer of selector shaft in a twisting motion.

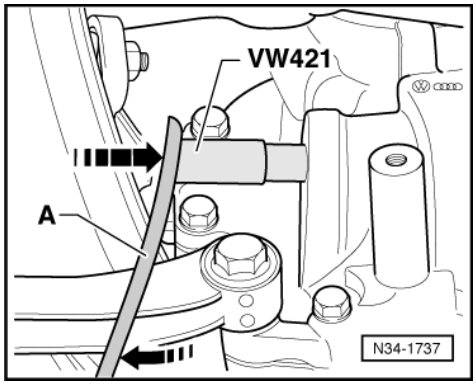


- -> Press in seal onto stop (in direction of arrow). When doing this, do not cant seal.
- If necessary use an assembly lever -A-. Use subframe as fulcrum point for lever.
- As subframes are not all uniform it may not be possible to use the tube VW 421 with gearbox in situ.
- If this is the case, use a commercially available socket AF 17 mm, length 83 mm.
- Assemble selector finger.

Rod selector mechanism => from page 56

Cable selector mechanism => from page 76

- Replenish gear oil to lower edge of filler hole => page 102 .

Gear oil specification => Page 2

- Adjusting selector mechanism:

Rod selector mechanism => Page 64 .

Cable selector mechanism => Page 84

Protected by copyright. Copyright by Volkswagen AG.
Copyright by Volkswagen AG. Volkswagen AG does not guarantee or accept any liability with respect to the correctness of information in this document. Copying for private or commercial purposes, in part or in whole, is not permitted unless authorised by Volkswagen AG.
satelettronica

# 2 - Renewing oil seals for flanged shafts with gearbox installed

## 2.1 - Renewing oil seals for flanged shafts with gearbox installed

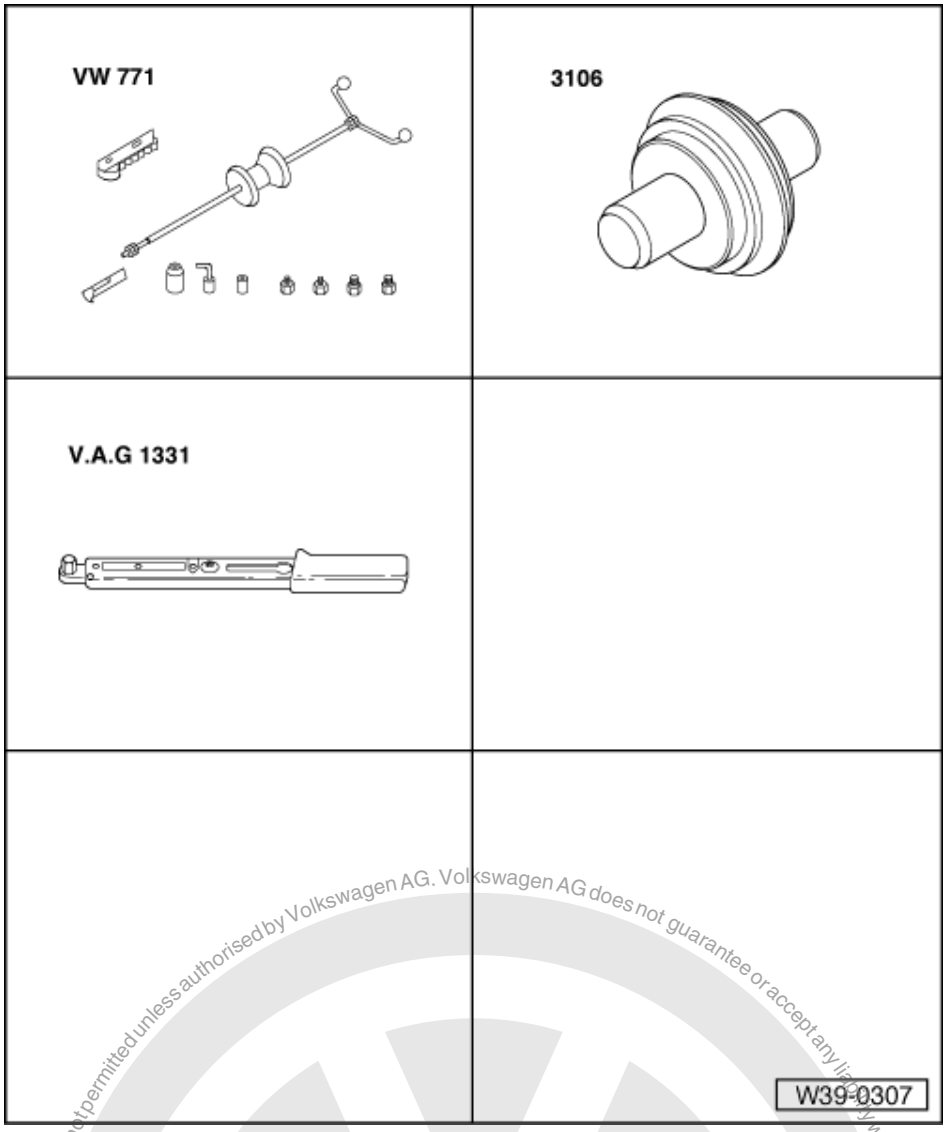


**Special tools, workshop equipment, test and measuring appliances and auxiliary items required**

- VW 771 Multi-purpose tool
- VW 771/37 Puller hooks
- 3106 Thrust piece
- V.A.G 1331 Torque wrench

- Observe general repair instructions
  => Page 20 .

**Removing**

- Disconnect drive shaft from flanged shaft.
- Tie-up drive shaft as high as possible. Do not damage paint on drive shaft.
- Remove flanged shaft securing bolts, to do this screw two bolts into the flange and counter-hold flanged shaft using a lever.

Protected by copyright. Copying for private or commercial purposes, in part or in whole, is not permitted unless authorised by Volkswagen AG. Volkswagen AG does not guarantee or accept any liability with respect to the correctness of information in this document. Copyright by Volkswagen AG.
satelettronica

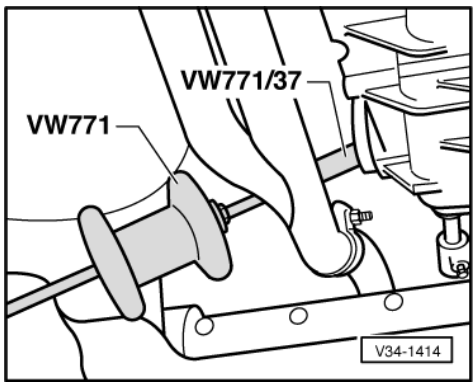


- Place drip tray underneath.
- Remove flanged shaft.
- -> Pull seal out. Do not damage plate sleeve on right-hand side when doing this, otherwise leaks will occur.

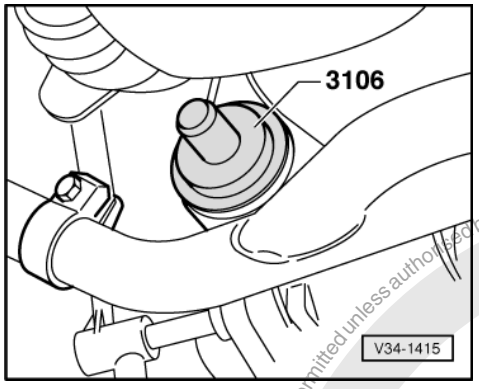


Installing

- -> Drive new seal in onto stop, when doing this do not cant seal.
- Fill space between sealing lip and dust lip with multi-purpose grease.
- Install flange shaft, tighten bolt to 25 Nm.

***Note:***

*Left and right-hand flange shafts differ. Do not interchange.*

- Install drive shaft, tighten bolts to 45 Nm.
- Check gearbox oil level and if necessary top up to lower edge of filler hole.

Gear oil specification => Page 2

Protected by copyright. Copying for private or commercial purposes, in part or in whole, is not permitted unless authorised by Volkswagen AG. Volkswagen AG does not guarantee or accept any liability with respect to the correctness of information in this document. Copyright by Volkswagen AG.
satelettronica

# 3 - Dismantling and assembling differential

## 3.1 - Dismantling and assembling differential

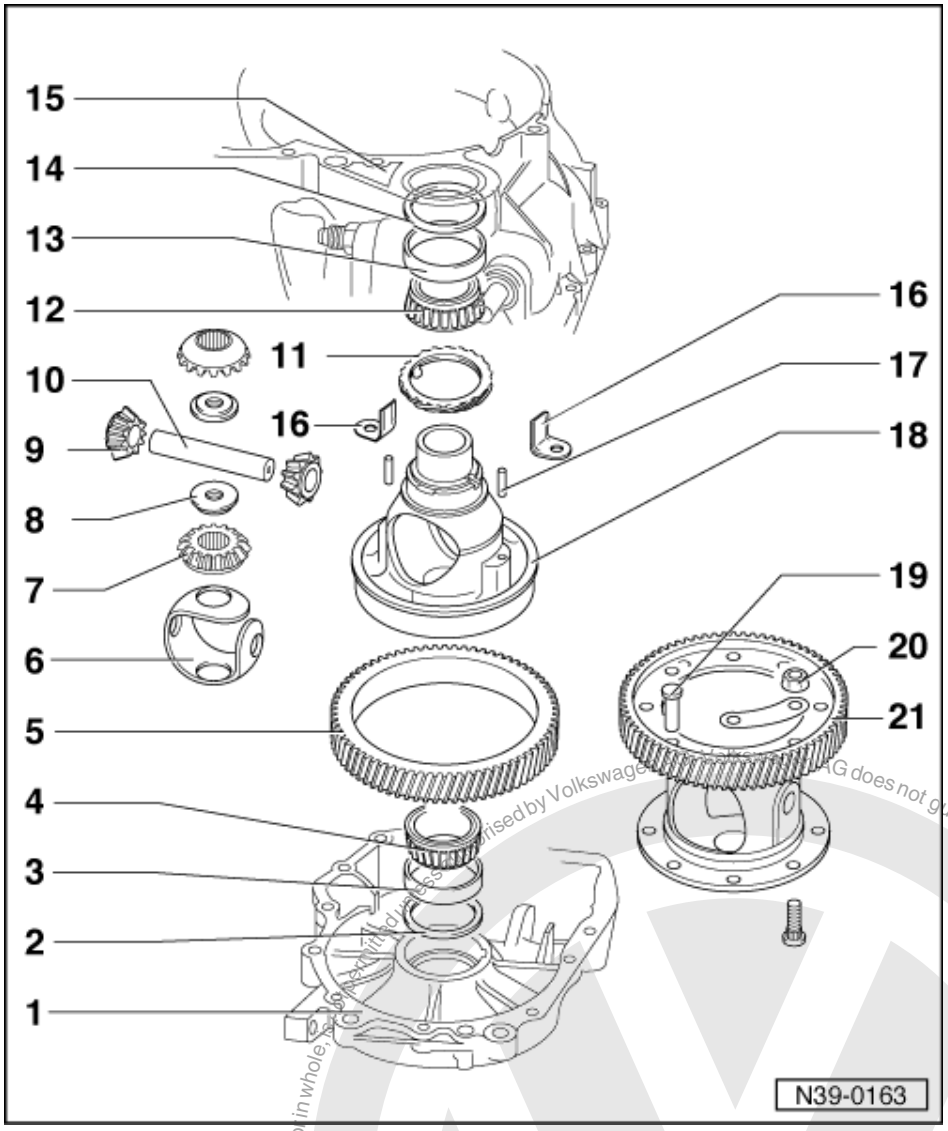


*Notes:*

- Heat taper roller bearing inner race to 100 °C before installing.
- Always renew both taper roller bearings together as a set.
- If taper roller bearings are renewed adjust differential => Page 180 .

1 Gearbox housing
2 Shim S1
- For differential
- Always 1 mm thick

3 Taper roller bearing outer race
- Pressing out => Fig. 1
- Pressing in => Fig. 2

4 Taper roller bearing inner race
- Pulling off => Fig. 3

Protected by copyright. Copying for private or commercial purposes, in part or in whole, is not permitted unless authorised by Volkswagen AG. Copyright by Volkswagen AG. Volkswagen AG does not guarantee or accept any liability with respect to the correctness of information in this document.
satelettronica

- Pressing on => Fig. 4

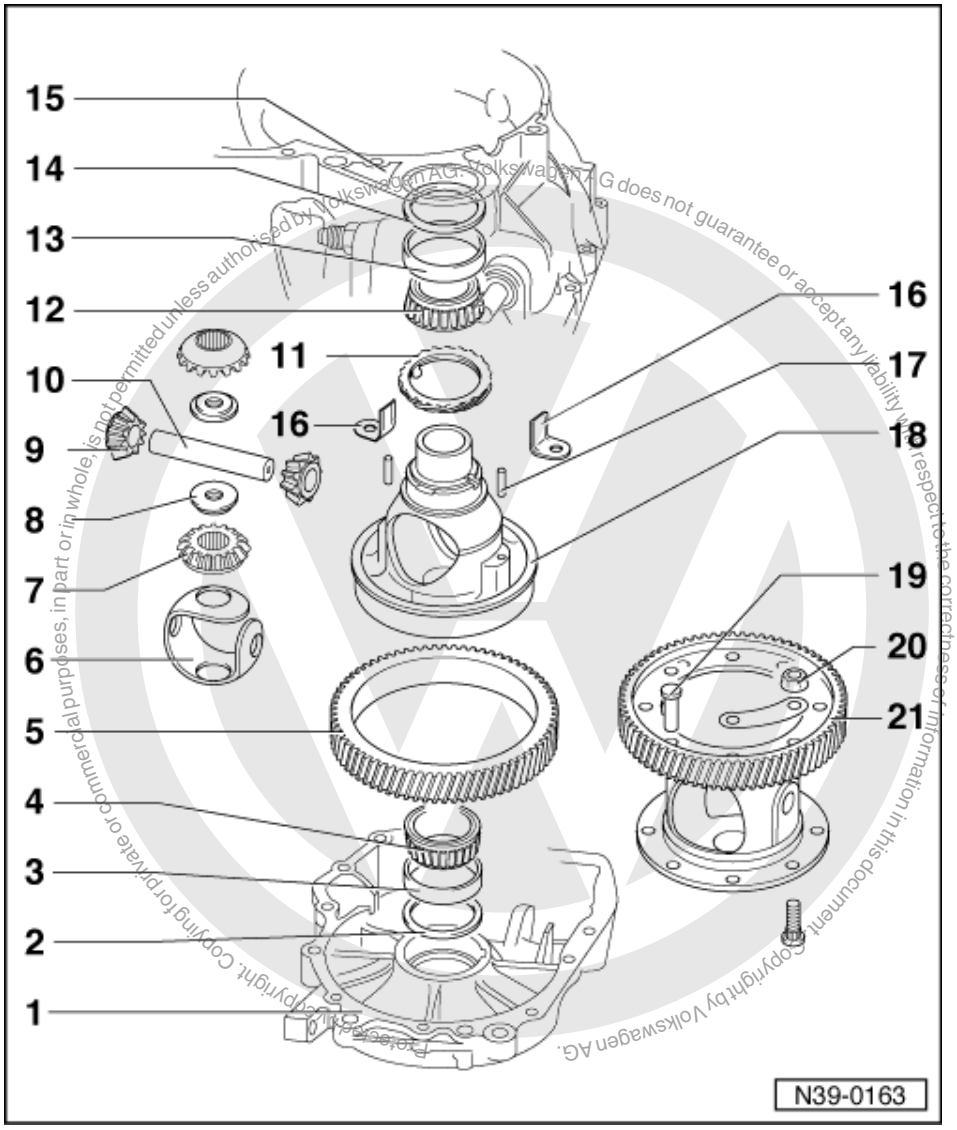


5 Final drive gear wheel
- Removing and installing => Page 177
- Ensure correct ratio (number of teeth) => Page 2

6 One-piece thrust washer
- Coat with gearbox oil when installing

7 Sun wheel
- Installing => Fig. 5

8 Threaded piece

9 Planet pinion
- Installing => Fig. 5

10 Planet pinion axis shaft
- Knock out with drift

11 Speedometer drive wheel
- Lever out with screwdriver

satelettronica

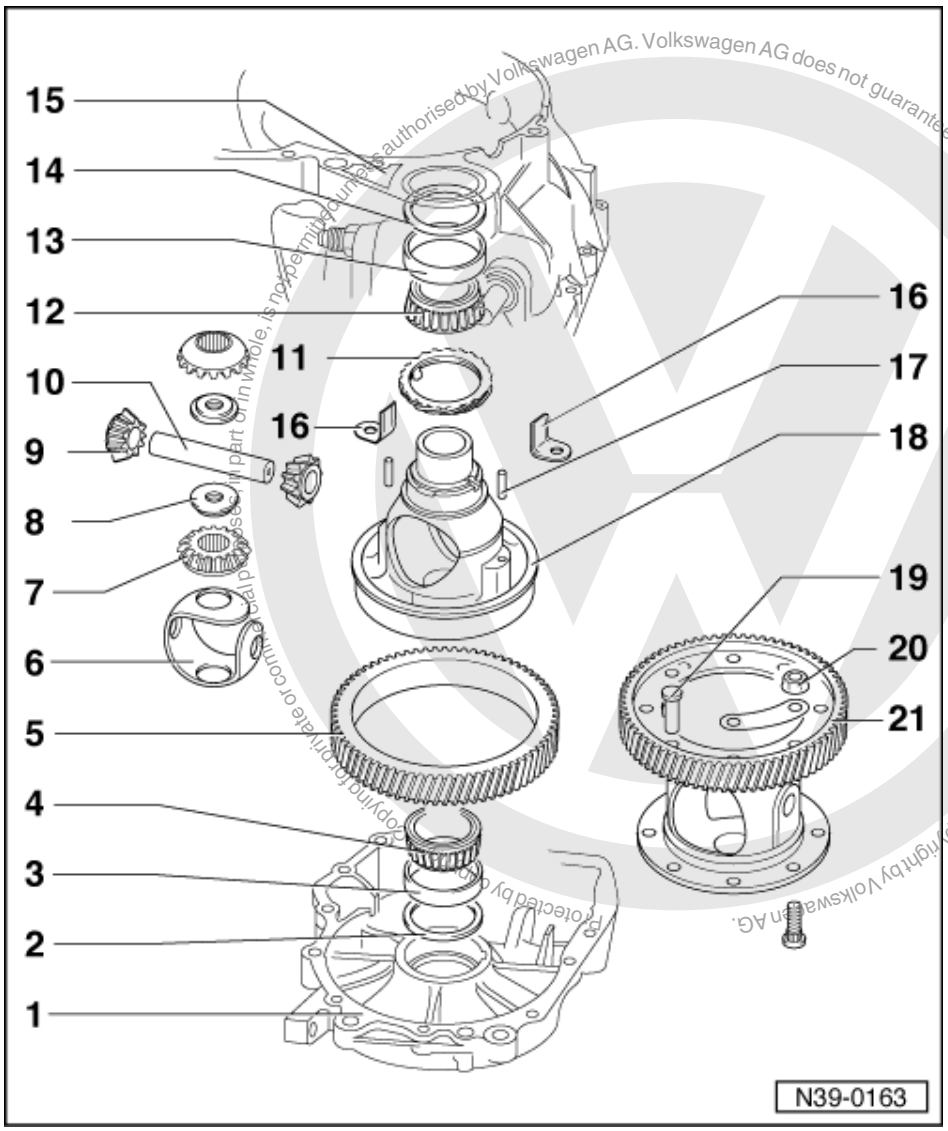


Protected by copyright. Copying for private or commercial purposes, in part or in whole, is not permitted unless authorised by Volkswagen AG. Volkswagen AG does not guarantee or accept any liability with respect to the correctness of information in this document. Copyright by Volkswagen AG.

satelettronica

12 Taper roller bearing inner race
- Pulling off => Fig. 3
- Pressing on with VW 454

13 Taper roller bearing outer race
- Pressing out => Fig. 7
- Pressing in => Fig. 8

14 Shim S2
- For differential
- Determining thickness => Page 180

15 Clutch housing

16 Angle piece
- Secures planet pinion axis shaft on gearboxes where final drive gear wheel is rivetted
- Secured by rivets (Item 19 )

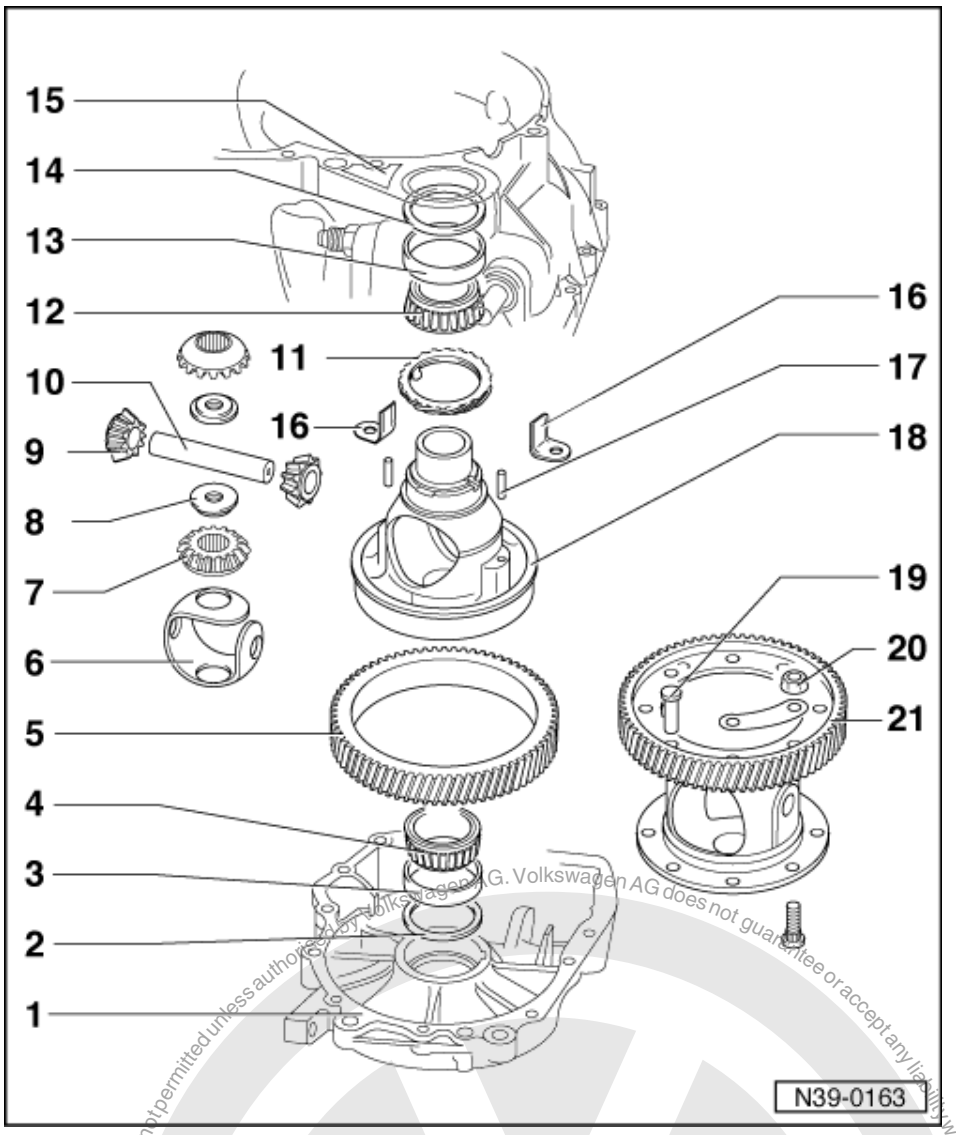


17 Spring pin
- For securing planet pinion axis shaft on gearboxes with bonded gear wheel

18 Differential housing
- When renewing: Observe adjustment overview => Page 180

19 Rivet
- As produced
- Drilling out => Fig. 9
- Installing gear wheel with bolts => Fig. 10

20 Hexagon nut, 70 Nm

21 Final drive gear, rivetted or bolted
- Rivetted in production
- Bolted => Fig. 10

Protected by copyright. Copying for private or commercial purposes, in any form and by any means, is not permitted unless authorised by Volkswagen AG. Volkswagen AG does not guarantee or accept any liability with respect to the correctness of information in this document. Copyright by Volkswagen AG.
satelettronica

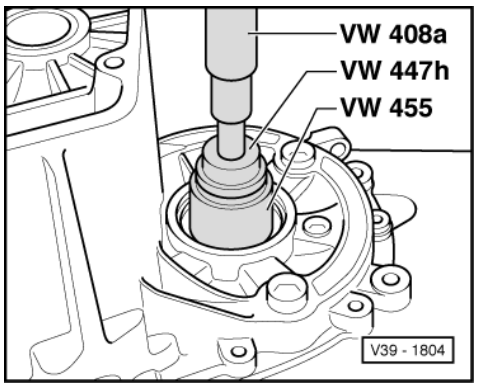


-> Fig.1 Pressing out taper roller bearing outer race

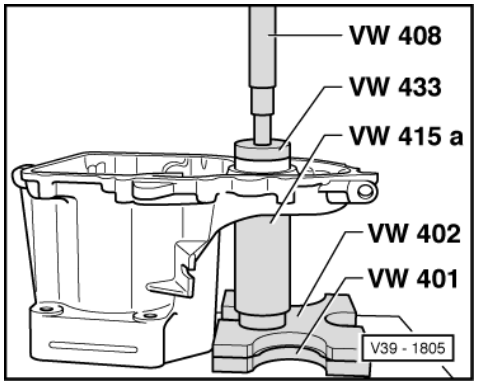


-> Fig.2 Pressing in taper roller bearing outer race

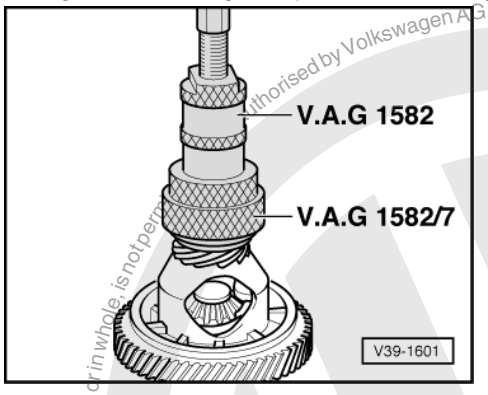


-> Fig.3 Pulling off taper roller bearing inner race

- Before fitting the extractor position press piece 30-11 on differential housing.

*Note:*

*Both both taper roller bearing inner races are pulled off the differential housing in the same way.*

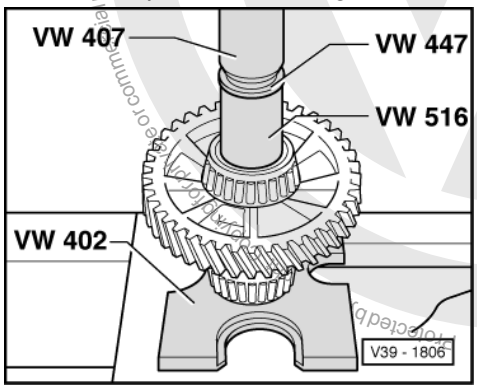


Reproduction for commercial purposes, part or in whole, is not permitted without authorised by Volkswagen AG. Volkswagen AG does not guarantee or accept any liability with respect to the correctness of information in this document. Copyright by Volkswagen AG.
Protected by copyright.
satelettronica

-> Fig.4 Pressing on taper roller bearing inner race

- Heat inner ring before pressing on to approx. 100° C.

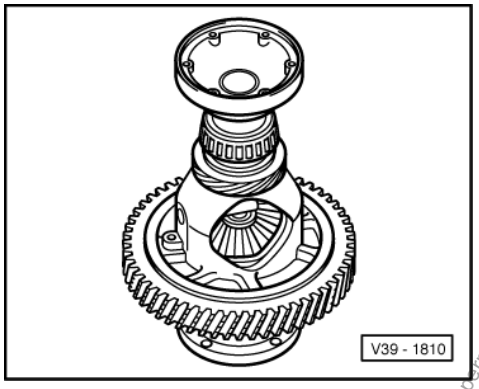


-> Fig.5 Installing differential bevel wheels

- Lubricate one piece thrust washer with gearbox oil and install.
- Install both sun wheels and secure (e.g. with flanged shaft).
- Insert a planet pinion and turned through 180°.
- Insert 2nd planet pinion exactly opposite first. Swing planet pinions into position. Push axis for planet pinions in up to 1st gear.
- Insert threaded pieces ensuring they are seated correctly.
- Drive planet pinion shaft into final position and secure.

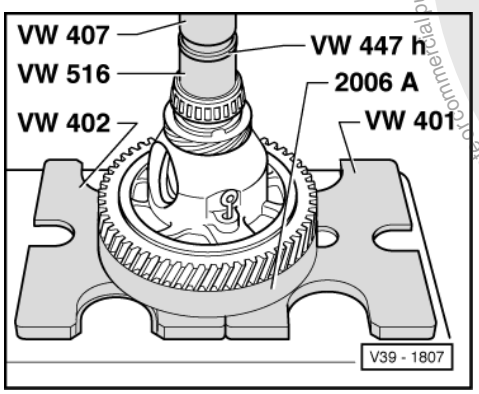


-> Fig.6 Pressing on taper roller bearing inner race

- Heat inner ring before pressing on to approx. 100°C.

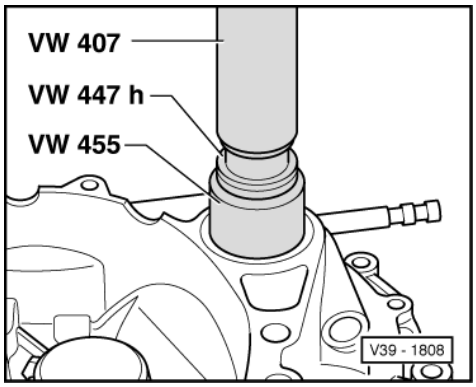


Protected by copyright. Copying for private or commercial purposes, in part or in whole, is not permitted unless authorised by Volkswagen AG. Volkswagen AG does not guarantee or accept any liability with respect to the correctness of information in this document. Copyright by Volkswagen AG.
satelettronica

-> Fig.7 Pressing out taper roller bearing outer race

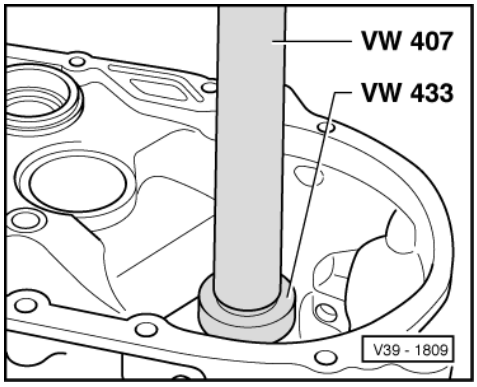


-> Fig.8 Pressing in taper roller bearing outer race

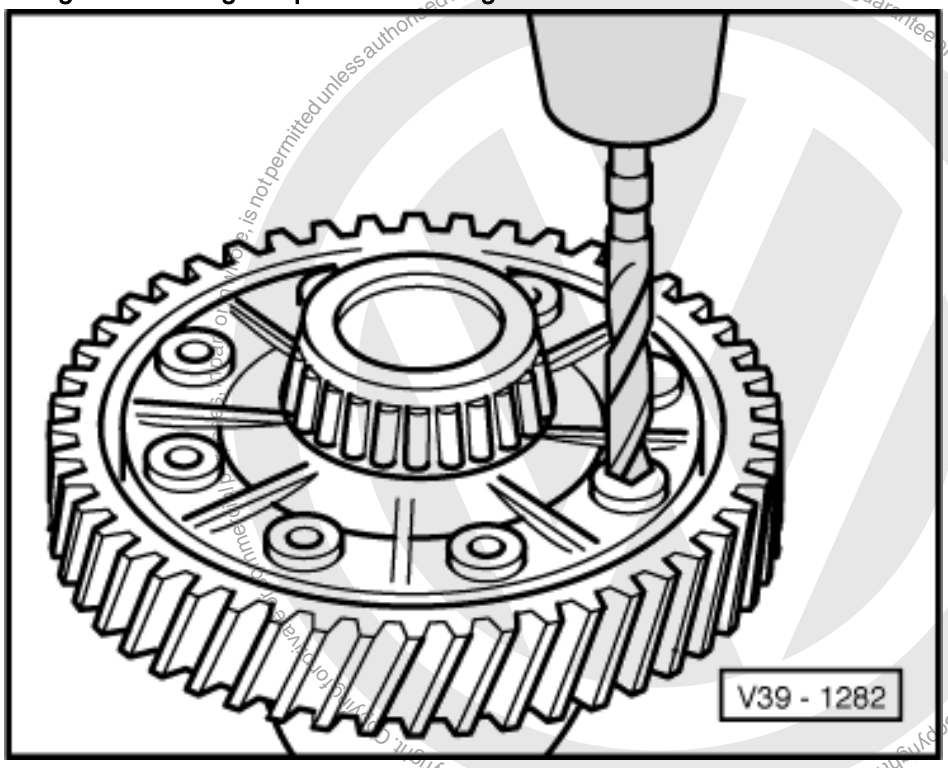


-> Fig.9 Drilling off rivet heads

- Drill out rivet heads with 12 mm drill from countersunk side and knock-out with drift.

*Note:*
*Clean differential before and after drilling, protect taper roller bearing from drillings.*

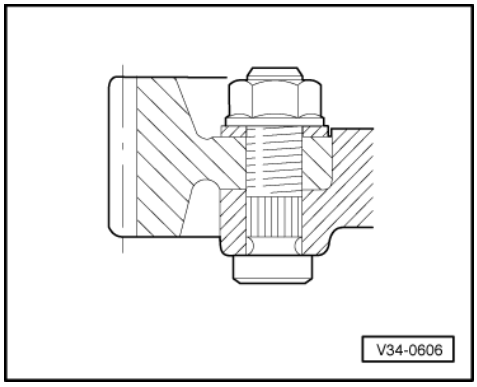


Copyright by Volkswagen AG. Volkswagen AG does not guarantee or accept any liability with respect to the correctness of information in this document. Copyright by Volkswagen AG. Reproduction, in whole or in part, is not permitted unless authorised by Volkswagen AG.
satelettronica

-> Fig.10 Assemble gear wheel and differential housing using special bolts, plates and nuts

## 3.2 - Removing and installing final drive gear wheel

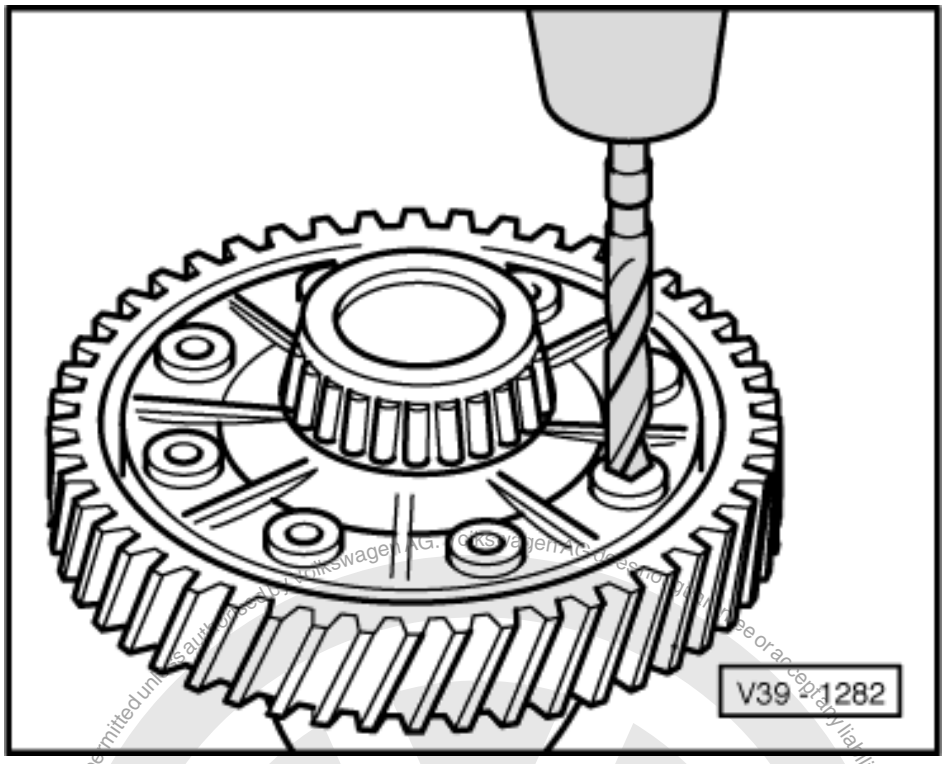


Removing

- -> Drill off rivet heads, if equipped, with 12 mm drill from depression side and drive out with drift.

*Note:*

*Clean differential before and after drilling, protect taper roller bearing from drillings.*

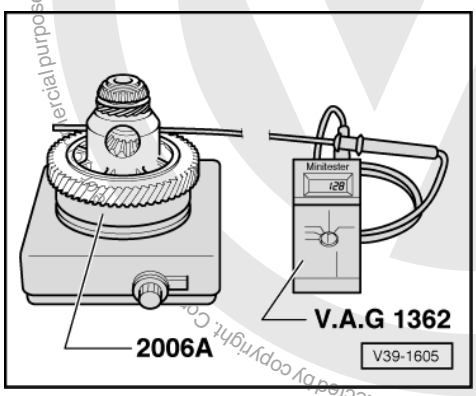


- -> Heat differential with gear wheel to 120 °C on a hot plate, thereby continually check the temperature of the gear wheel with Mini-tester V.A.G 1362. Place on ring 2006A so that the heat is directed directly into the gear wheel.

satelettronica

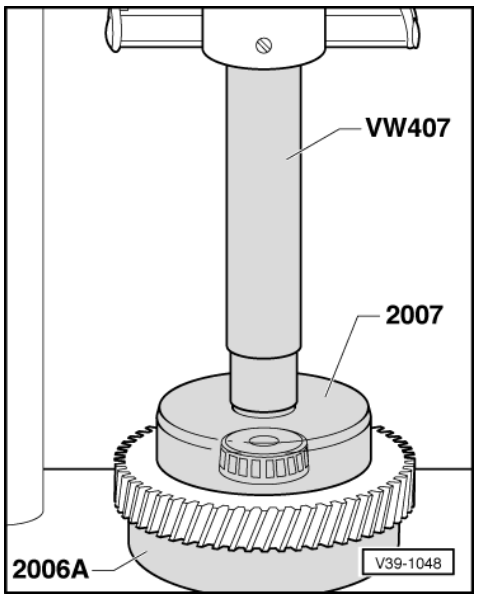


- -> Place ring 2006A on press table with chamfer on inner diameter towards table. Then place heated toothed wheel with differential on ring.
- Fit press piece 2007 and press toothed wheel off differential.

**Installing**

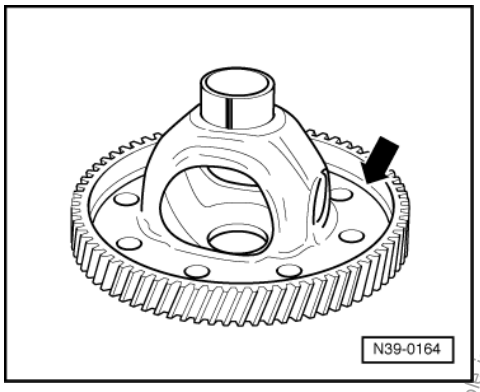


When renewing the final drive gear ensure correct ratio (number of teeth) => Page 2 .

Installation position:

- -> The circumferential groove (arrow) faces towards differential bevel gear mounting.

**Gearboxes with bonded final drive gear wheel**

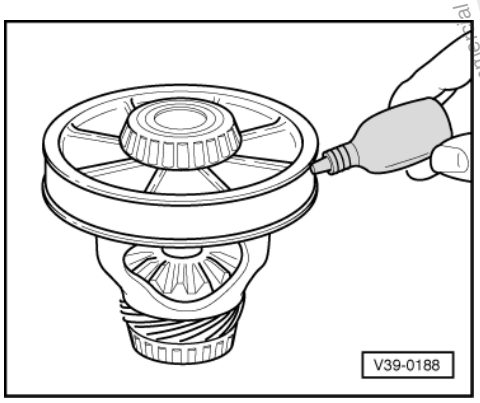


Protected by copyright. Copying for private or commercial purposes, in part or whole, is not permitted unless authorised by Volkswagen AG. Volkswagen AG does not guarantee or accept any liability with respect to the correctness of information in this document. Copyright by Volkswagen AG.
satelettronica

- Before assembling gear wheel and differential housing thoroughly clean seating face with a wire brush and scraper (do not use abrasive paper). The seating face must also be oil and grease-free.
- -> Coat the cleaned seating face on differential housing evenly with locking fluid AMV 185 100 01.

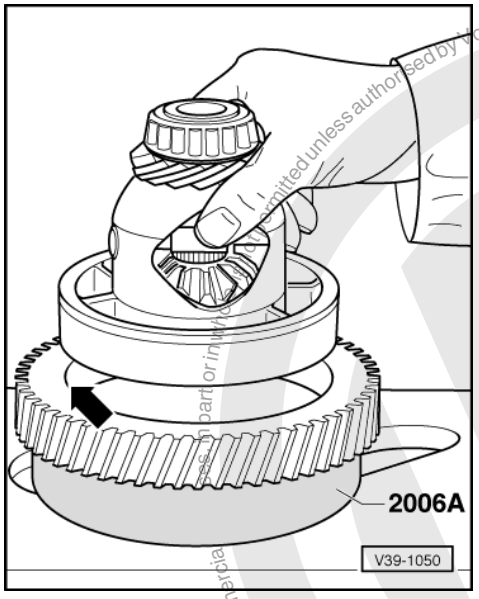


- Heat gear wheel for final drive on a hot plate to approx.150 °C, thereby continually check the gear wheel temperature with Minitester V.A.G 1362.
- -> Place ring 2006A on press table with the chamfer on inner diameter facing upwards. Place final drive gear wheel heated to 150 °C centrally on ring, with larger chamfer on gear wheel (arrow) uppermost and depression downwards. Insert differential, pretreat with locking fluid AMV 185 100 01.

*Notes:*

- To ensure that the gear wheel is seated perfectly fit differential quickly on to stop without a pulse.
- If when inserting differential in the gear wheel the parts cant or stick then the assembling procedure is to be stopped immediately. Press gear wheel off and start assembling sequence from the beginning again.

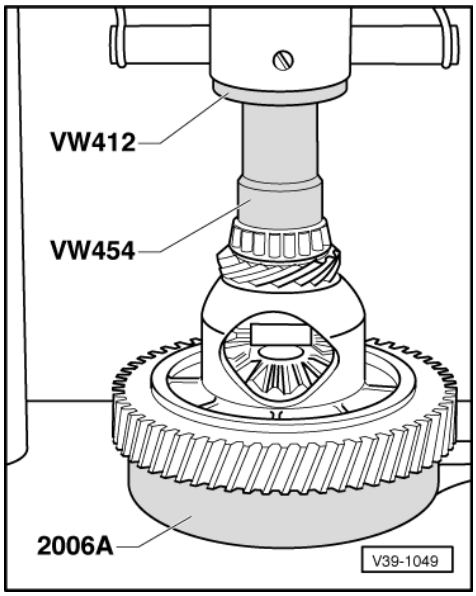


- -> Maintain the press pressure for one to two minutes after the components are assembled until a complete heat exchange is completed.

Gearboxes with bolted final drive gear wheel

- Assemble differential and gear wheel with special bolts.

Copyright. Copying for private or commercial purposes, in part or in whole, is not permitted unless authorised by Volkswagen AG. Volkswagen AG does not guarantee or accept any liability with respect to the correctness of information in this document.

satelettronica

Tightening torque

Final drive gear to differential 70 Nm

# 4 - Adjustment overview

## 4.1 - Adjustment overview

*Note:*

*If repairs have been carried out to the gearbox it is only necessary to adjust the input shaft, output shaft or differential if components have been renewed which have a direct effect on the adjustment of the gearbox. Refer to the following table to avoid unnecessary adjustment:*

| | | to be adjusted: | | |
|---|---|---|---|---|
| | | Input shaft => Page 145 | Output shaft => Page 163 | Differential => Page 180 |
| Parts renewed: | Gearbox housing | x | x | x |
| | Clutch housing | x | x | x |
| | Input shaft | x | | |
| | Output shaft (final drive) | | x | |
| | Differential housing | | | x |
| | Input shaft taper roller bearing | x | | |
| | Output shaft taper roller bearing | | x | |
| | Differential taper roller bearing | | | x |

# 5 - Adjusting differential

## 5.1 - Adjusting differential

The differential must be adjusted, when

- Gearbox housing
- Clutch housing

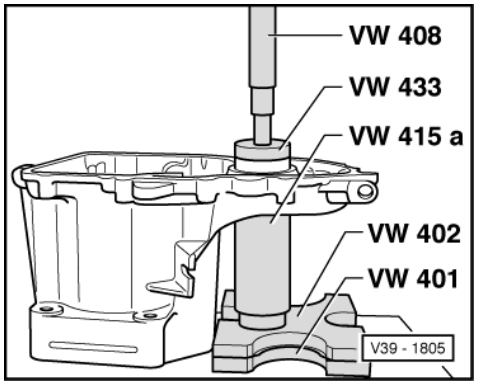


- Differential housing

or the

Protected by copyright. Copying for private or commercial purposes, in part or in whole, is not permitted unless authorised by Volkswagen AG. Volkswagen AG does not guarantee or accept any liability with respect to the correctness of information in this document. Copyright by Volkswagen AG.
satelettronica

Protected by copyright. Copyright by Volkswagen AG. Volkswagen AG does not guarantee or accept any liability with respect to the correctness of information in this document. Copyright by Volkswagen AG. This document or part of it is not permitted unless authorised by Volkswagen AG.

- Differential taper roller bearing

have been renewed.

Adjustment overview => Page 180 .

- -> Press taper roller bearing outer race (gear wheel side) with shim S1 (always 1 mm thick) into gearbox housing.

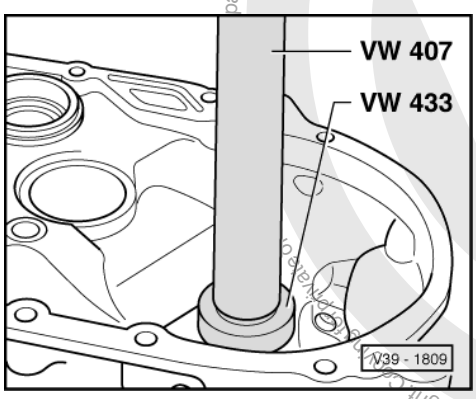


***Note:***

*Taper roller bearing inner and outer races are paired. Do not interchange!*

- -> Press taper roller bearing outer race (opposite gear wheel side) without shim into clutch housing.

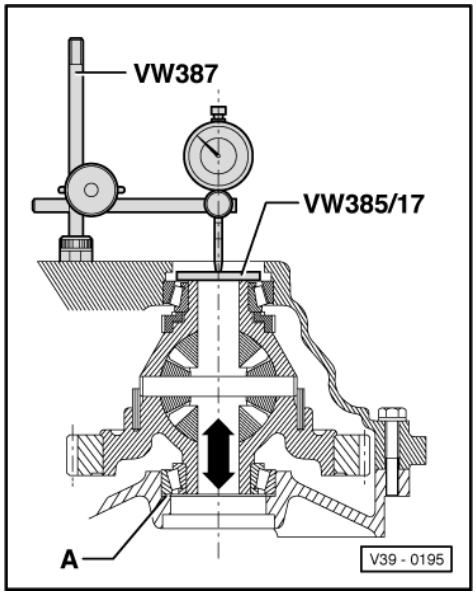


- Fit differential into gearbox housing.
- Fit gearbox housing and tighten 5 bolts to 25 Nm.
- -> Assemble measuring device and D.T.I. (3 mm measuring scale, approx. 30 mm extension).

A - Shim S1 = 1 mm thick

- Zero D.T.I. with one 1 mm preload.
- Move differential up and down, read and note play indicated on D.T.I.
  (Example: 1.50 mm)

satelettronica

*Note:*

*Do not turn differential when measuring, otherwise the bearing will settle and a false measurement will be given.*

Determining shim S2 thickness

The specified bearing preload is obtained by adding a constant figure (0.30 mm) to the reading obtained for S2 (example: 1.50 mm).

Example:

| | |
|---|---|
| Reading | 1.50 mm |

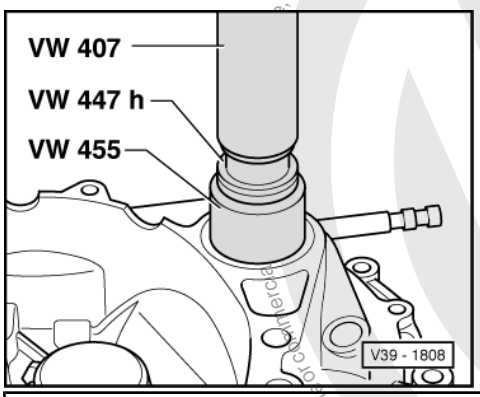


| | |
|---|---|
| + Preload (constant figure) | 0.30 mm |
| Thickness of shim S2 = | 1.80 mm |

- -> Remove clutch housing and drive out taper roller bearing outer race.
- Fit determined S2 shim (in example 1.80 mm) and press taper roller bearing outer race again into clutch housing.
- Assemble clutch housing and tighten bolts to 25 Nm.

The following shims are available:

| Size (mm) | Part No. |
|---|---|
| 1.00 | 084 409 383 AE |
| 1.40 | 084 409 383 AF |
| 1.45 | 084 409 383 AG |
| 1.50 | 084 409 383 AH |
| 1.55 | 084 409 383 AJ |
| 1.60 | 084 409 383 AK |
| 1.65 | 084 409 383 AL |
| 1.70 | 084 409 383 AM |
| 1.75 | 084 409 383 AN |
| 1.80 | 084 409 383 AP |
| 1.85 | 084 409 383 AQ |
| 1.90 | 084 409 383 AR |
| 1.95 | 084 409 383 AS |
| 2.00 | 084 409 383 AT |
| 2.05 | 084 409 383 BA |
| 2.10 | 084 409 383 BB |
| 2.15 | 084 409 383 BC |
| 2.20 | 084 409 383 BD |
| 2.25 | 084 409 383 BE |
| 2.30 | 084 409 383 BF |
| 2.35 | 084 409 383 BG |
| 2.40 | 084 409 383 BH |

Volkswagen AG does not guarantee or accept any liability with respect to the correctness of information in this document. Copying for private or commercial purposes, is not permitted unless authorised by Volkswagen AG.
Please read copyright notice at the beginning of this document.
satelettronica

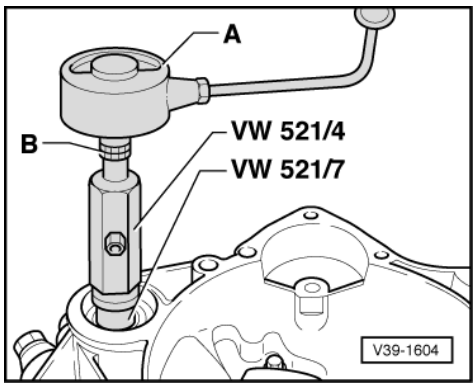


-> Checking friction moment

A - Commercial torque gauge 0 ... 600 Ncm

B - 13 mm socket insert

For new taper roller bearings the friction moment must be 120 ... 250 Ncm.

For used taper roller bearings the friction torque must be at least 30 Ncm.

*Note:*

*Lubricate bearings with gearbox oil before checking friction moment.*

satelettronica

Protected by copyright. Copying for private or commercial purposes, in part or in whole, is not permitted unless authorised by Volkswagen AG. Volkswagen AG does not guarantee or accept any liability with respect to the correctness of information in this document. Copyright by Volkswagen AG.